1. HDC Agenda 2020-10-07

   Documents:

   HDC AGENDA 2020-10-07.PDF

2. Item A Section 106 Review For T-Mobile October 2020

   Documents:

   ITEM A SECTION 106 REVIEW FOR T-MOBILE OCTOBER 2020.PDF

CITY OF WESTMINSTER
HISTORIC DISTRICT COMMISSION
AGENDA

Wednesday, October 7, 2020, at 7 PM
Virtual Meeting
www.facebook.com/WestminsterMD
www.WestminsterMD.gov

I. Call to Order

Statement of Authority — The Westminster Historic District Commission derives its authority from Chapter 164, Article 9A of the City Code, which is authorized by Maryland Code Annotated, Land Use Article, Division 1, Single Jurisdiction Planning and Zoning, Title 8, Historic Preservation. The qualifications of the Westminster Historic District Commission are on file at the City Administration Building, 56 West Main Street; the file is open to the public – Chair

II. Approval of Minutes

August 5, 2020

III. Old Business

None

IV. New Business

Item A Section 106 Filing for T-Mobile Located at the City owned water tower at McDaniel College

V. Historic District Commission and Public Comments

VI. Adjournment

Posted October 2, 2020

Item A

To: Westminster Historic District Commission

From: Sandy Anderson Main Street Manager

Cc: Mark A. Depo, Director of Community Planning and Development
Andrew Gray, Comprehensive Planner
Andrea Gerhard, Comprehensive Planner

Date: October 2, 2020

Subject: Section 106 Review of Telecommunications Equipment at 2 College Hill Drive

BACKGROUND

According to A Citizen's Guide to Section 106 Review, in the National Historic Preservation Act of 1966 (NHPA), Congress established a comprehensive program to preserve the historical and cultural foundations of the nation as a living part of community life. Section 106 of the NHPA is crucial to that program because it requires consideration of historic preservation in the multitude of projects with federal involvement that take place across the nation every day. The Section 106 review process gives the public the opportunity to alert the federal government to the historic properties that we all value and influence decisions about projects that affect them.

PROPOSAL

T-Mobile proposes the modification of an existing telecommunications facility on the Water Tower located at 2 College Hill Drive. T-Mobile proposes the replacement of three antennas with three new antennas and the replacement of three RRU's. T-Mobile also proposes the replacement of one large equipment cabinet with two new small equipment cabinets.

RECOMMENDATION

City Staff recommends the Historic District Commission review the attached information and provide feedback and/or questions regarding the proposal.

ATTACHMENTS

- Map of location in relation to National Register District
- Photo of the Water Tower Base
- Effects on Identified Properties
- T-Mobile CD's

Border of National Register District is indicated in blue; the City's water tower is located just outside.

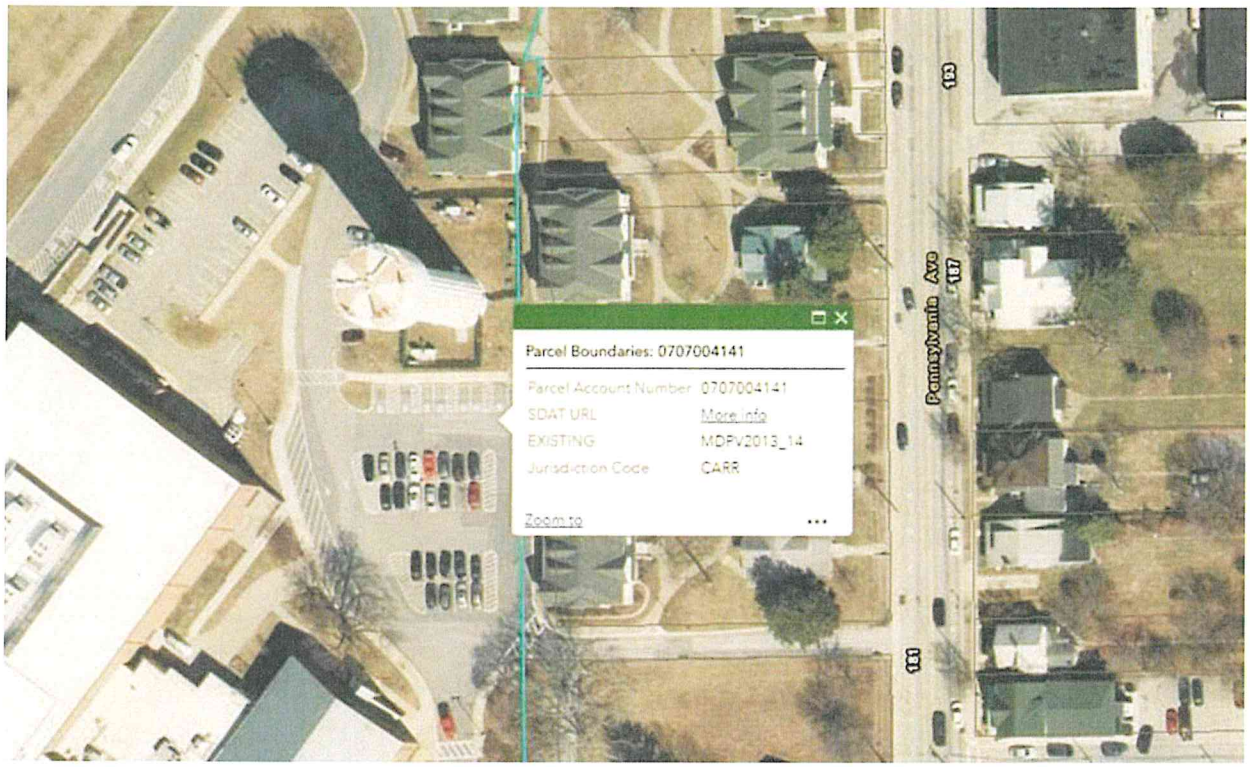

Current Appearance

Attachment 10: Effects on Identified Properties

September 16, 2020

Site Number: 7BAN231A
41st Street
Westminster, MD 21157

This Statement of Effects has been prepared for the proposed changes to an existing telecommunications installation at 41st Street in Westminster, Maryland. Because telecommunication facilities are Federal Communication Commission (FCC)-licensed entities, the construction of the facility constitutes an undertaking and its potential impact on historic properties must be considered in accordance with Section 106 of the National Historic Preservation Act (NHPA) of 1966 (as amended).

The subject property is a water tower constructed before 1981 according to aerial photographs. Existing installations include antennas and equipment by T-Mobile and other carriers. T-Mobile installations include three (3) antennas per sector for a total of nine (9) antennas, one (1) RRU per sector for a total of three (3) RRUs and two (2) TMAs per sector for a total of six (6) TMAs. Existing installations also include cable and equipment cabinets on a concrete pad within an existing chain-link fenced compound.

T-Mobile proposes the removal and replacement of one (1) antenna per sector for a total of three (3) antenna removals and replacements, the removal of one (1) TMA per sector for a total of three (3) TMAs and the addition of one (1) RRU per sector for a total of three (3) RRUs. One (1) existing TMA per sector will be relocated. T-Mobile also proposes the removal of one (1) large equipment cabinet to be replaced by two (2) smaller equipment cabinets on a new 3'x5' concrete pad within the existing equipment compound at grade. Existing and proposed T-Mobile antennas are mounted at a radial center of 168'-0" agl. The top of the water tower is at a height of 168'-0" agl. No other construction related activities are anticipated. The undertaking does not involve any ground disturbance.

Area of Potential Effects

Federal regulations related to telecommunication projects define the Area of Potential Effect (APE) as *"the geographic area or areas within which an Undertaking may directly or indirectly cause alterations in the character or use of Historic Properties, if any such properties exist."* As there is no ground disturbance associated with this project, the APE for direct effects for this project is limited to the equipment installation locations. Based upon conditions observed in the field, the APE has been determined to be a 700-foot radius around the installation site.

Identified Properties

A review of previously inventoried historic properties was conducted to assess potential direct and indirect/visual effects. The subject water tower is subject to SHPO review because it appears to be over 45 years of age and is located within 250 feet of a National Register listed historic district. The water tower has not been determined eligible for the National Register of Historic Places. It is a common water tower. It is not associated with historically significant persons or events and is not a noteworthy example of its type or method of construction, nor is it the work of a master and is therefore not eligible for the National Register of Historic Places. The subject property lies approximately 35 feet west of the Westminster Historic District (CARR-152), listed on the National Register in 1980. The Buell House at

203 Pennsylvania Avenue (CARR-1282) is a contributing resource to the Westminster Historic District and was found to be eligible for the National Register in 1987. There are no other National Register listed or eligible properties within the APE for indirect/visual effects (Map 1, Table 1).

Effects on Identified Properties

Direct Effects

As the subject water tower is not individually eligible for the National Register of Historic Places, there will be **No Effect** with respect to direct effects.

Indirect/Visual Effects

The subject water tower is located in an area surrounded by apartment buildings constructed around 2007, replacing former contributing resources to the Westminster Historic District, making the nearest contributing resources to the historic district about 250 feet east of the Site. The proposed antenna removals and replacements, TMA removals and relocations and addition of three RRUs as well as equipment changes constitute a minor change to this existing facility and the changes will not be readily distinguishable from existing installations. The additions will not endanger those qualities that make either the Westminster Historic District (CARR-152) or the Buell House (CARR-1282) eligible for the National Register of Historic Places. Therefore, there will be **No Adverse Effect** with respect to indirect/visual effects.

Please refer to the following maps and photographs for additional information.

David C. Berg
Architectural Historian

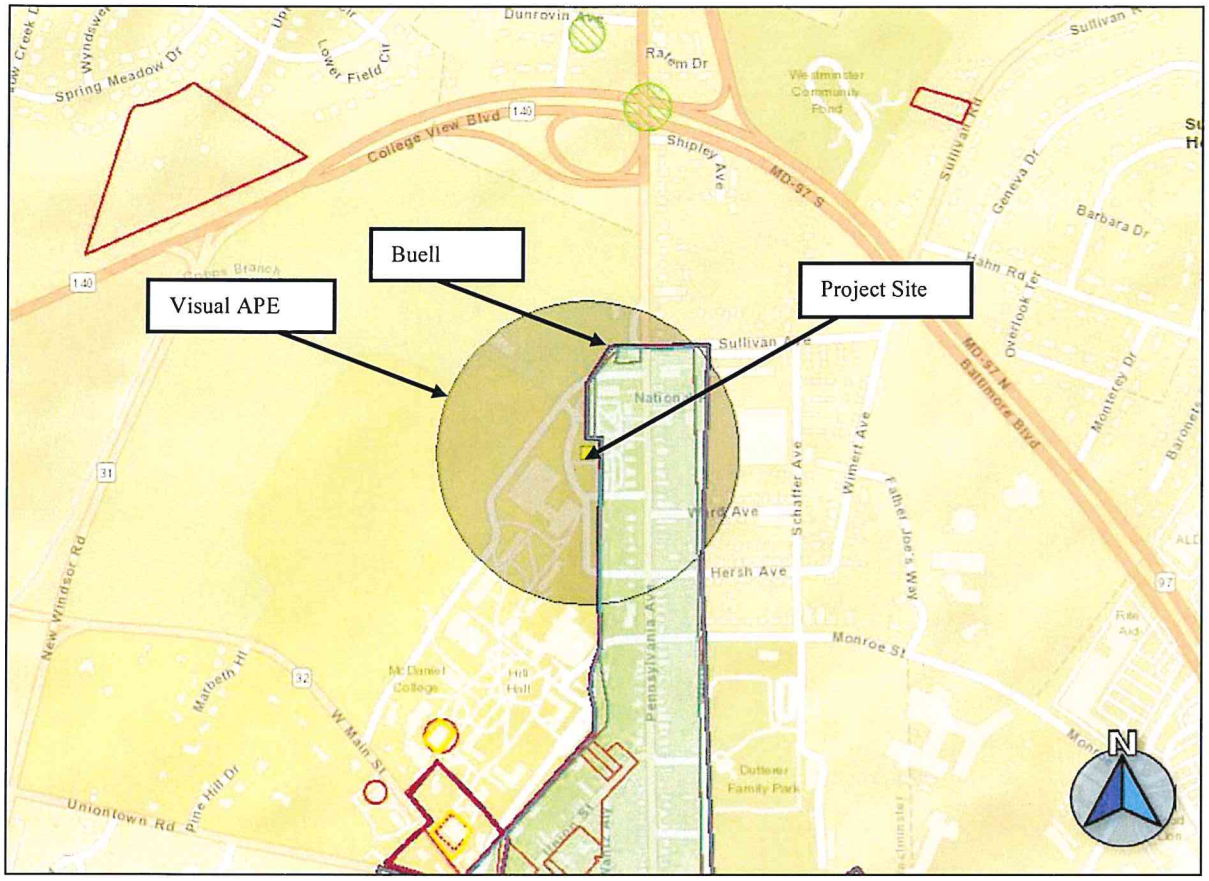

Map 1: Map showing the subject water tower and the 700-foot APE.
Source: http://geodata.md.gov/

Table 1. Historic Properties within a 700-foot radius of the project site			
Name	**Distance from project site**	**National Register Status**	**Effect**
Westminster Historic District (CARR-152)	35 Feet	Listed	No Adverse Effect
Buell House, 203 Pennsylvania Avenue (CARR-1282)	450 feet	Eligible	No Adverse Effect

1. View towards Water Tower, facing north.

2. View towards Water Tower, facing east.

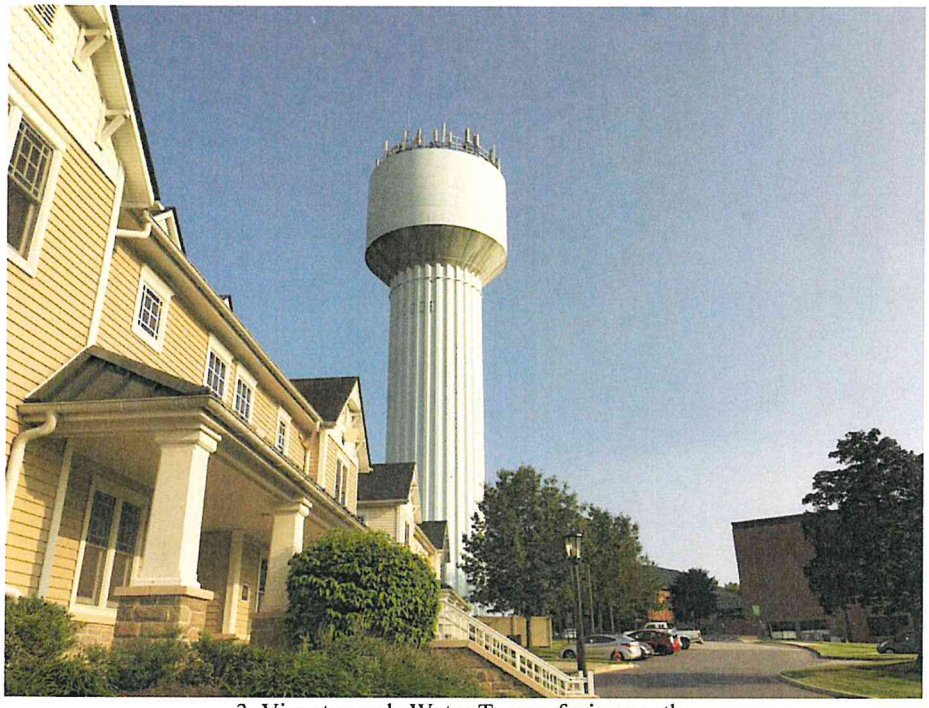

3. View towards Water Tower, facing south.

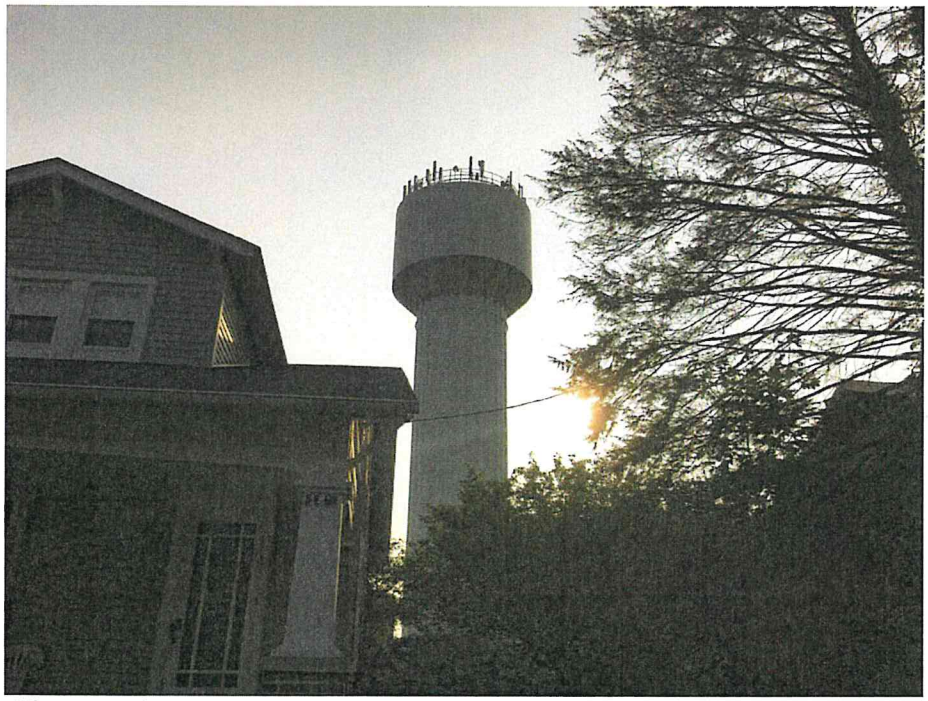

4. View towards Water Tower from Westminster Historic District (CARR-152), facing west.

5. View towards Water Tower from Buell House (CARR-1282), facing southwest.

6. View from Water Tower, facing south.

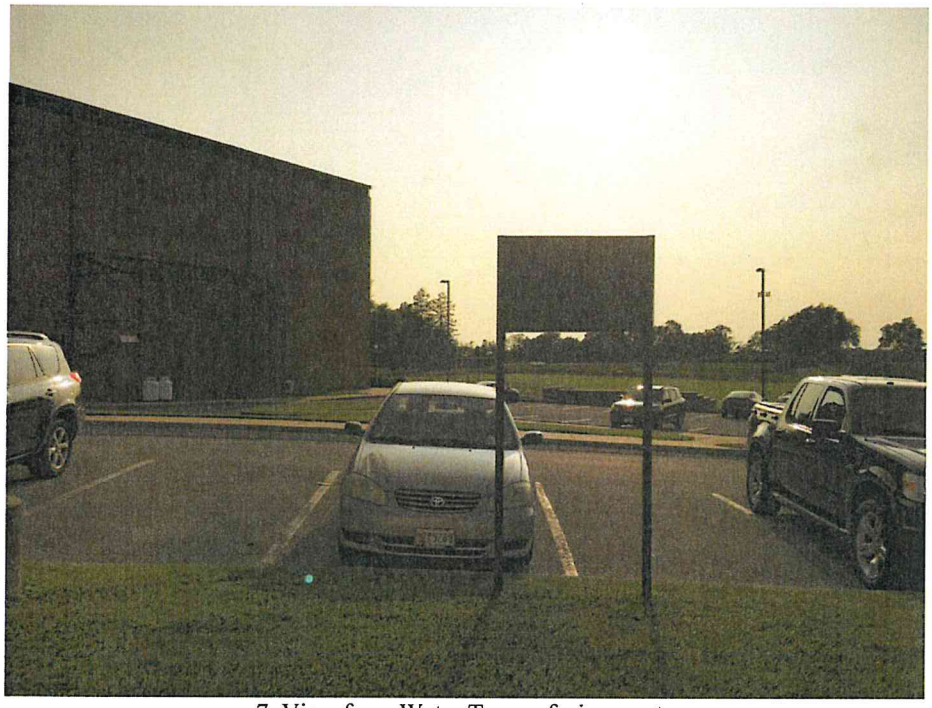

7. View from Water Tower, facing west.

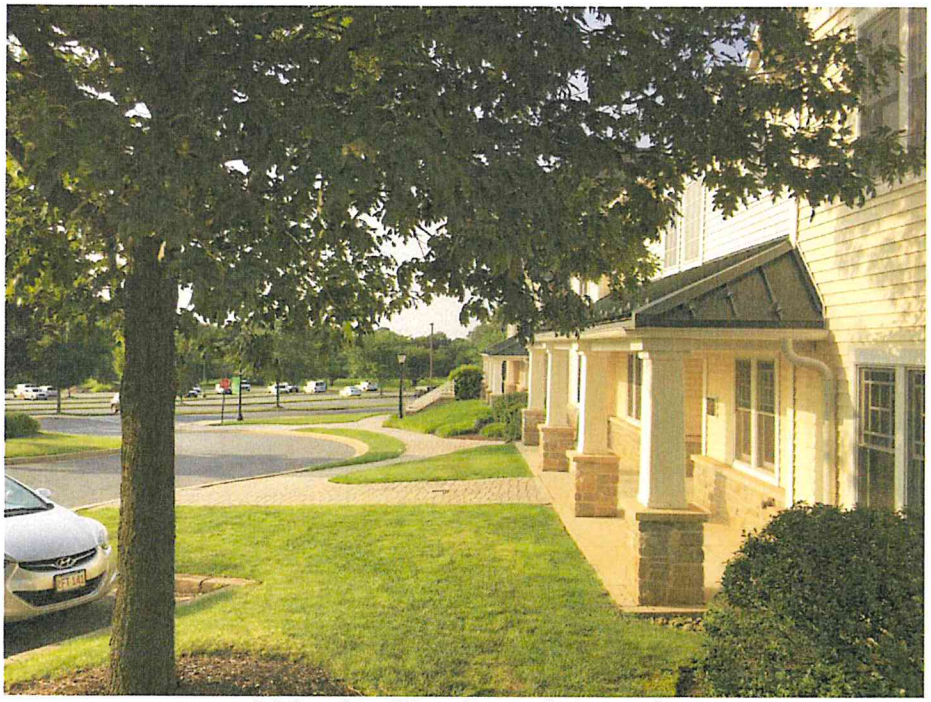

8. View from Water Tower, facing north.

9. View from Water Tower towards Westminster Historic District (CARR-152), facing east.

10. View from Water Tower towards Buell House (CARR-1282), facing east.

T··Mobile·

SITE ID:	**7BAN231A**	**SITE ADDRESS:**	**41ST STREET**
SITE NAME:	**TOWN OF WESTMINSTER - WT**		**WESTMINSTER, MD 21157**
SITE TYPE:	**WATER TANK**	**COUNTY:**	**CARROLL**
DESIGN:	**67D5A997DB MUAC**	**JURISDICTION:**	**CARROLL COUNTY**

VICINITY MAP

DRIVING DIRECTION:

DIRECTIONS FROM T-MOBILE BALTIMORE OFFICE, 12050 BALTIMORE AVENUE, BELTSVILLE, MD 20705:

HEAD NORTHWEST TOWARD US-1 N/BALTIMORE AVE, TURN RIGHT ONTO US-1 N/BALTIMORE AVE USE THE LEFT 2 LANES TO TURN LEFT ONTO THE MD-200 W RAMP TO I-95/I-270. CONTINUE ONTO MD-200 W TOLL ROADM TAKE EXIT 19 B FOR I-95 N TOWARD BALTIMORE TOLL ROAD, KEEP LEFT TO CONTINUE ON EXIT 33 A-B, FOLLOW SIGNS FOR MD-198 W/BURTONSVILLE KEEP LEFT AND MERGE WITH I-95 N, USE THE LEFT LANE TO TAKE EXIT 49B FOR I-695 W TOWARD TOWSONM MERGE WITH I-695 N, USE THE RIGHT 2 LANES TO TAKE EXIT 19 FOR I-795/NORTHWEST EXPY TOWARD OWINGS MILLS/REISTERSTOWN, CONTINUE ONTO I-795 N/NORTHWEST EXPYM CONTINUE ONTO MD-140 W PASS BY 7-ELEVEN LEFT ONTO SULLIVAN RD, TURN RIGHT ONTO SULLIVAN AVE, TURN LEFT ONTO PENNSYLVANIA AVE, TURN RIGHT TOWARD 41ST ST, TURN RIGHT ONTO 41ST ST DESTINATION WILL BE ON THE LEFT.

BUILDING CODES

APPLICABLE BUILDING CODES:

- 2018 BUILDING CODE OF MARYLAND
- 2015 EXISTING BUILDING CODE OF MARYLAND
- 2018 ENERGY CONSERVATION CODE OF MARYLAND
- 2012 GREEN CONSTRUCTION CODE OF MARYLAND
- 2018 MECHANICAL CODE OF MARYLAND
- 2018 PLUMBING CODE OF MARYLAND

FOR ANY CONFLICTS BETWEEN SECTIONS OF LISTED CODES AND STANDARDS REGARDING MATERIAL, METHODS OF CONSTRUCTION, OR OTHER REQUIREMENTS, THE MOST RESTRICTIVE REQUIREMENT SHALL GOVERN. WHERE THERE IS CONFLICT BETWEEN A GENERAL REQUIREMENT AND A SPECIFIC REQUIREMENT, THE SPECIFIC REQUIREMENT SHALL GOVERN.

811 Know what's below. Call before you dig. www.call811.com

PROJECT DESCRIPTION

SCOPE OF WORK:

T-MOBILE PROPOSES TO MODIFY AN EXISTING WIRELESS INSTALLATION. THE SCOPE WILL CONSIST OF THE FOLLOWING AS PER RFDS VERSION 4 DATED 07/29/2020.

TOPSIDE:

1. REMOVE (3) (E) ANDREW-HBXX-9014DS-A2M (QUAD) ANTENNA IN POSITION #1 FOR (1) PER SECTOR
2. REMOVE (3) (E) ERICSSON TWIN STYLE 1A-KRY 112 489/2 TMAS IN POSITION #1 FOR (1) PER SECTOR
3. RELOCATED (3) (E) ERICSSON TWIN STYLE 1BX-KRY 112144/2 TMAS IN POSITION #1 FOR (1) PER SECTOR
4. INSTALL (3) (N) ERICSSON-AIR6449 B41 (ACTIVE ANTENNA – MASSIVE MIMO) ANTENNAS IN POSITION #1 FOR (1) PER SECTOR
5. INSTALL (3) (N) 4415 B25 RRU NEAR ANTENNAS IN POSITION #2 FOR (1) PER SECTOR
6. INSTALL (3) (N) COMMSCOPE-SDX1926Q-43(E14F05P86) DIPLEXERS IN POSITION #2 FOR (1) PER SECTOR

BOTTOMSIDE

7. REMOVE (1) RBS 3106 CABINET
8. REMOVE (3) RU22
9. REMOVE (6) RUS01 B2
10. INSTALL (1) 6160 SSC CABINET
11. INSTALL (1) B160 BATTERY CABINET
12. INSTALL (1) BB 6648 FOR N2500
13. INSTALL (1) BB 6630 FOR L2500
14. INSTALL (1) PSU 4813 VOLTAGE BOOSTER
15. INSTALL (3) RUS01 B4
16. INSTALL (3) ERRICSSION 6X12 HCS 80M

RFDS INFORMATION

RFDS NAME:	7BAN231A_ANCHOR_4_2020-07-29
VERSION:	4
RAN TEMPLATE:	67D5A997DB ODE+MUAC
DATE/TIME APPROVED:	07/29/2020 3:46:31 PM
MODIFIED BY:	KUNAL.MEHTA6@T-MOBILE.COM
DATE/TIME MODIFIED:	07/29/2020 3:46:31 PM

APPROVALS

THE FOLLOWING PARTIES HEREBY APPROVE AND ACCEPT THESE DOCUMENTS AND AUTHORIZE THE CONTRACTOR TO PROCEED WITH THE CONSTRUCTION DESCRIBED HEREIN. ALL CONSTRUCTION DOCUMENTS ARE SUBJECT TO REVIEW BY THE LOCAL BUILDING DEPARTMENT AND ANY CHANGES AND MODIFICATION THEY MAY IMPOSE.

T-MOBILE RF ENGINEER:		DATE:
T-MOBILE OPERATIONS:		DATE:
SITE ACQUISITION:		DATE:
CONSTRUCTION MANAGER:		DATE:
PROPERTY OWNER:		DATE:
ZONING:		DATE:
PROJECT MANAGER:		DATE:

NOTES

NO WORK IS TO BE PERFORMED ON THIS SITE WITHOUT REVIEW OF THE APPROVED STRUCTURAL ANALYSIS, IF ANY DISCREPANCIES ARE FOUND THE GENERAL CONTRACTOR SHALL NOTIFY ENGINEER IN WRITING. AT NO TIME WILL ANY ADDITIONAL ANTENNAS BE INSTALLED WITHOUT WRITTEN CONSENT FROM ENGINEER OF RECORD.

PROJECT INFORMATION

SITE ADDRESS:	41ST STREET WESTMINSTER, MD 21157
COUNTY:	CARROLL
JURISDICTION:	CARROLL
PROPOSED USE:	UNMANNED TELECOMMUNICATION FACILITY
PARCEL NUMBER (APN):	–
OCCUPANCY CLASS:	U
ZONE:	R
BUILDING USE:	–
CONSTRUCTION TYPE:	–
STRUCTURE TYPE:	WATER TANK
LATITUDE:	N 39° 35' 11.6" (39.58655000)
LONGITUDE:	W 77° 00' 0.4" (-77.00012000)
PROPERTY OWNER:	WESTERN MARYLAND COLLEGE, INC 2 COLLEGE HILL WESTMINSTER, MD 21157

PROJECT TEAM

APPLICANT:

T-MOBILE
12050 BALTIMORE AVENUE
BELTSVILLE, MD 20705

SITE ACQUISITION:

SMARTLINKGROUP
1362 MELLON ROAD, SUITE 140
HANOVER, MD 21076
CONTACT: HINSON M. WHITE
PHONE: HINSON.WHITE@SMARTLINKGROUP.COM

ARCHITECTURAL & ENGINEERING:

TRYLON TSF
1825 W. WALNUT HILL LANE, SUITE 120
IRVING, TX 75038
ENGINEER: KATYA SERAVALLE
PHONE: 1 (855) 669-5421
EMAIL: KATYA.SERAVALLE@TRYLON.COM

SHEET INDEX

SHEET #	DESCRIPTION	REVISION #
T-1	TITLE SHEET	A
GN-1	GENERAL NOTES	A
A-1	SITE PLAN	A
A-2	ANTENNA LAYOUT	A
A-3	ANTENNA SCHEDULE	A
A-4	ELEVATION VIEWS	A
A-5	ELEVATION VIEWS	A
A-6	EQUIPMENT LAYOUT	A
D-1	DETAILS	A
D-2	DETAILS	A
D-3	DETAILS	A
D-4	DETAILS	A
E-1	ELECTRICAL DETAILS	A
E-2	GROUNDING DETAILS	A
E-3	PLUMBING DIAGRAM	A

T··Mobile· stick together
12050 BALTIMORE AVENUE
BELTSVILLE, MD 20705

smartlink
1362 MELLON ROAD, SUITE 140,
HANOVER, MD 21076

Trylon
1825 W. WALNUT HILL LANE, SUITE 302
IRVING, TEXAS 75038
1-855-669-5421

STATE OF MARYLAND — JINSHAN WANG — Sep 08, 2020 — 54187 — PROFESSIONAL ENGINEER

PROFESSIONAL CERTIFICATE
I HEREBY CERTIFY THAT THESE DOCUMENTS WERE PREPARED OR APPROVED BY ME, AND THAT I AM A DULY LICENSED PROFESSIONAL ENGINEER UNDER THE LAWS OF THE STATE OF MARYLAND, LICENSE NO 54187, EXPIRATION DATE 04/11/2021

DRAWING SCALES ARE INTENDED FOR 11"x17" OR 24"x36" SIZE PRINTED MEDIA ONLY.

SUBMITTALS

REV	DATE	DESCRIPTION	BY
A	08/21/20	90% CD	RC
A	09/07/20	100% CD	KZ

SITE INFORMATION

SITE NAME:
TOWN OF WESTMINSTER – WT
SITE NUMBER:
7BAN231A
SITE ADDRESS:
41ST STREET
WESTMINSTER, MD 21157

SHEET DESCRIPTION
TITLE SHEET

SHEET No.
T-1

ABBREVIATIONS, SITE LEGENDS & SYMBOLS

ABBREVIATIONS

A.B.	ANCHOR BOLT
AC	ALTERNATE CURRENT/AIR CONDITIONER
ADD'L	ADDITIONAL
A.F.F.	ABOVE FINISHED FLOOR
A.F.G.	ABOVE FINISHED GRADE
ALUM.	ALUMINUM
ALT.	ALTERNATE
ANT.	ANTENNA
APPROX.	APPROXIMATE(LY)
ARCH.	ARCHITECT(URAL)
AWG.	AMERICAN WIRE GAUGE
BATT.	BATTERY
BD.	BOARD
BLDG.	BUILDING
BLK.	BLOCK
BM.	BEAM
BRKR.	BREAKER
BTCW.	BARE TINNED COPPER WIRE
BTS.	BASE TRANSMISSION SYSTEM
B/U	BACK-UP CABINET
C	CONDUIT
CAB.	CABINET
CB.	CIRCUIT BREAKER
C.I.P.	CAST IN PLACE
CKT.	CIRCUIT
CLR.	CLEAR
CMU	CONCRETE MASONRY UNIT (JAMB BLOCKS)
COL.	COLUMN
CONC.	CONCRETE
CONN.	CONNECTION(OR)
CONST.	CONSTRUCTION
CONT.	CONTINUOUS
DBL.	DOUBLE
DC	DIRECT CURRENT
DEM.	DEMAND
DEPT.	DEPARTMENT
D.F.	DOUGLAS FIR
DIA.	DIAMETER
DIAG.	DIAGONAL
DIM.	DIMENSION
DWG.	DRAWING(S)
DWL.	DOWEL(S)
EA.	EACH
EGR.	EMERGENCY GENERATOR RECEPTACLE
EL.	ELEVATION
ELEC.	ELECTRICAL
ELEV.	ELEVATOR
EMT.	ELECTRICAL METALLIC TUBING
E.N.	EDGE NAIL
ENCL.	ENCLOSURE
ENG.	ENGINEER
EQ.	EQUAL
EXST.(E)	EXISTING
F/A	FIRE ALARM
F.F.	FINISH FLOOR
F.G.	FINISH GRADE
FIN.	FINISH(ED)
FLR.	FLOOR
FLUOR	FLUORESCENT
FDN.	FOUNDATION
FT.(')	FOOT (FEET)
FTG.	FOOTING
FU	FUSE
GR	GROUND
GR	GROWTH (CABINET)
GA.	GAUGE
GEN.	GENERATOR
GL	GALVANIZE(D)
GND	GROUND
GPS	GLOBAL POSITIONING SYSTEM
GRND.	GROUND
GSM	GLOBAL SYSTEM MOBILE (2G+)
HT.	HEIGHT
IN.(")	INCH(ES)
INT.	INTERIOR
LB.(#)	POUND(S)
L.B.	LAG BOLTS
L.F.	LINEAR FEET (FOOT)
L.	LONG(ITUDINAL)
LTE	LONG TERM EVOLUTION (4G)
MAS.	MASONRY
MAX.	MAXIMUM
MECH.	MECHANICAL
MFR.	MANUFACTURER
MIN.	MINIMUM
MISC.	MISCELLANEOUS
MTD.	MOUNTED
MTG.	MOUNTING
N	NEUTRAL
(N)	NEW
NEMA	NATIONAL ELECTRICAL MANUFACTURERS ASSOC.
NO.(#)	NUMBER
N.T.S.	NOT TO SCALE
OH	OVERHEAD
OPNG.	OPENING
PCS	PERSONAL COMMUNICATION SERVICES
PH	PHASE
PLY.	PLYWOOD
PNLBD	PANELBOARD
PPC	POWER PROTECTION CABINET
PRC	PRIMARY RADIO CABINET
PRI	PRIMARY
P.S.F.	POUNDS PER SQUARE FOOT
P.S.I.	POUNDS PER SQUARE INCH
PWR.	POWER (CABINET)
QTY.	QUANTITY
RAD.(R)	RADIUS
RBS	RADIO BASE STATION (BASE STATION 3G NETWORKS)
REF.	REFERENCE
REINF.	REINFORCEMENT(ING)
REQ'D.	REQUIRED
RRU	REMOTE RADIO UNIT (RADIO TRANSCEIVER)
SAF	SAFETY
SCH.	SCHEDULE
SEC	SECONDARY
SHT.	SHEET
SIM.	SIMILAR
S.N.	SOLID NEUTRAL
SPEC.	SPECIFICATION(S)
SQ.	SQUARE
S.S.	STAINLESS STEEL
STD.	STANDARD
STL.	STEEL
STRUC.	STRUCTURAL
SURF	SURFACE
SW	SWITCH
TEL.	TELEPHONE
TEMP.	TEMPORARY
THK.	THICK(NESS)
	TOWER MOUNTED AMPLIFIER
TYP.	TYPICAL
U.G.	UNDER GROUND
U.L.	UNDERWRITERS LABORATORY INC.
UMTS	UNIVERSAL MOBIL TECH. SYSTEM (3G MOBILE TECH.)
V.I.F.	VERIFY IN FIELD
XFER	TRANSFER
XFMR	TRANSFORMER
XLPE	CROSS-LINK POLYETHYLENE
℄	CENTERLINE
⅊	PLATE, PROPERTY LINE

SITE LEGENDS

- CENTERLINE
- PROPERTY/LEASE LINE
- GROUND CONDUCTOR
- A — COAXIAL CABLE
- X — CHAIN LINK FENCING
- OHT — OVERHEAD TELEPHONE LINE
- OHP — OVERHEAD POWER LINE
- E — POWER RUN
- F/P — FIBER/POWER RUN
- T — TELCO RUN
- T/E — POWER/TELCO RUN
- G — GROUNDING CONDUCTOR
- CHEMICAL GROUND ROD (KIT GROUND ROD)
- CADWELD CONNECTION
- MECHANICAL CONNECTION
- HALO GROUND CONNECTION
- CIRCUIT BREAKER
- UTILITY METER BASE
- TRANSFORMER
- STEPDOWN TRANSFORMER
- POLE
- (N) POLE MOUNTED XFMER
- EXISTING POLE MOUNTED XFMR
- (N) PAD MOUNTED XFMER
- EXISTING PAD MOUNTED XFMER

SYMBOLS & MATERIAL

- DETAIL REFERENCE
- ELEVATION REFERENCE
- SECTION REFERENCE
- MASONRY
- CONCRETE
- EARTH
- GRAVEL/STONE
- PLYWOOD
- SAND
- WOOD CONT.
- WOOD BLOCKING
- STEEL

GENERAL NOTES

1. THE LATEST EDITION OF THE AMERICAN INSTITUTE OF ARCHITECTS DOCUMENT A201"GENERAL CONDITIONS OF THE CONTRACT FOR CONSTRUCTION" ARE INCLUDED IN THESE SPECIFICATIONS AS IF COMPLETELY REPRODUCED HERE IN.
2. THIS FACILITY IS AN UNOCCUPIED PCS TELECOMMUNICATIONS SITE AND IS EXEMPT FROM DISABLED ACCESS REQUIREMENTS.
3. PRIOR TO THE SUBMISSION OF BIDS, THE CONTRACTORS PARTICIPATING SHALL VISIT THE JOB SITE AND FAMILIARIZE THEMSELVES WITH ALL FIELD CONDITIONS AFFECTING THE PROPOSED PROJECT INCLUDING DEMOLITION, ELECTRICAL, MECHANICAL AND STRUCTURAL INSTALLATIONS, AS WELL AS WITH THE CONSTRUCTION AND CONTRACT DOCUMENTS AND SHALL CONFIRM THAT THE PROJECT CAN BE ACCOMPLISHED AS SHOWN PRIOR TO PROCEEDING WITH CONSTRUCTION. SHOULD ANY ERRORS, OMISSION, OR DISCREPANCIES BE FOUND, THE GENERAL CONTRACTOR SHALL IMMEDIATELY NOTIFY 'T-MOBILE' CONSTRUCTION MANAGER AND THE ARCHITECT IN WRmnG. IN THE EVENT OF DISCREPANCIES, THE CONTRACTOR SHALL INCLUDE THE MORE COSTLY OR EXTENSIVE WORK IN THE BID, UNLESS SPECIFICALLY DIRECTED OTHERWISE. IF A DISCREPANCY EXISTS AND THE PROJECT MANAGER AND ARCHITECT ARE NOT NOTIFIED, THE GENERAL CONTRACTOR SHALL BE HELD RESPONSIBLE FOR ALL COSTS INCURRED TO REPAIR OR CORRECT ALL PROBLEMS IHAT RESULT.
4. DRAWINGS SHALL NOT BE SCALED. THESE DRAWINGS ARE INTENDED TO BE DIAGRAMMATIC ONLY. FIGURED DIMENSIONS HAVE PRECEDENCE OVER DRAWING SCALE AND DETAIL DRAWINGS HAVE PRECEDENCE OVER SMALL SCALE-DRAWINGS. CONTRACTOR SHALL CHECK ACCURACY OF ALL DIMENSIONS IN THE FIELD, UNLESS SPECIFICALLY NOTED, DO NOT FABRICATE ANY MATERIALS, OR BEGIN ANY CONSTRUCTION UNTIL THE ACCURACY OF DRAWING DIMENSIONS HAVE BEEN VERIFIED AGAINST ACTUAL FIELD DIMENSIONS.
5. THE CONTRACTOR SHALL INCLUDE IN HIS OR HER BID ALL MATERIALS, EQUIPMENT, APPURTENANCES AND LABOR NECESSARY TO COMPLETE THE WORK AS INDICATED OR IMPLIED BY THESE DRAWINGS.
6. CONTRACTOR SHALL NOTIFY THE 'T-MOBILE' CONSTRUCTION MANAGER, THE PROPERTY OWNER AND THE ARCHITECT IF ANY DETAILS ARE CONSIDERED IMPRACTICAL, UNSUITABLE, UNSAFE, NOT WATERPROOF, OR NOT WITHIN CUSTOMARY TRADE PRACTICE. IF WORK IS PERFORMED, IT WILL BE ASSUMED THAT THERE IS NO OBJECTION TO ANY DETAIL. DETAILS ARE INTENDED TO SHOW THE END RESULT OF THE DESIGN. MINOR MODIFICATIONS MAY BE REQUIRED TO SUIT JOB CONDITIONS, AND SHALL BE INCLUDED AS PART OF THE WORK.
7. EXISTING ELEVATIONS AND LOCATIONS TO BE JOINED SHALL BE VERIFIED BY THE CONTRACTOR BEFORE CONSTRUCTION. IF THEY DIFFER FROM THOSE SHOWN ON THE PLANS, THE CONTRACTOR SHALL NOTIFY THE "T-MOBILE" CONSTRUCTION MANAGER AND THE ARCHITECT SO THAT MODIFICATIONS CAN BE MADE BEFORE PROCEEDING WITH THE WORK.
8. THE CONTRACTOR SHALL VERIFY ALL TELEPHONE & RADIO EQUIPMENT LAYOUTS, SPECIFICATIONS, PERFORMANCE, INSTALLATION AND FINAL LOCATIONS WITH "T-MOBILE" CONSTRUCTION MANAGER PRIOR TO BEGINNING WORK. THE CONTRACTOR SHALL BE RESPONSIBLE FOR COORDINATING HIS WORK WITH ERICSSON RADIO SYSTEMS.
9. ALL SYMBOLS AND ABBREVIATIONS USED ON THE DRAWINGS ARE CONSIDERED CONSTRUCTION STANDARDS. IF THE CONTRACTOR HAS QUESTIONS REGARDING THEIR EXACT MEANING, THE "T-MOBILE" CONSTRUCTION MANAGER AND THE ARCHITECT SHALL BE NOTIFIED FOR CLARIFICATION BEFORE THE CONTRACTOR PROCEEDS WITH THE WORK.
10. THE CONTRACTOR SHALL OBTAIN AND PAY FOR PERMITS, LICENSES AND INSPECTIONS NECESSARY FOR PERFORMANCE OF THE WORK AND INCLUDE THOSE IN THE COST OF THE WORK TO "T-MOBILE".
11. THE CONTRACTOR SHALL PROVIDE CONTINUOUS SUPERVISION WHILE ANY SUBCONTRACTORS OR WORKMEN ARE ON THE SITE AND SHALL SUPERVISE AND DIRECT ALL WORK, USING HIS BEST SKILL AND ATTENTION. HE SHALL BE SOLELY RESPONSIBLE FOR ALL CONSTRUCTION MEANS, METHODS, TECHNIQUES, PROCEDURES AND SEQUENCES AND FOR COORDINATING ALL PORTIONS OF THE WORK UNDER THE CONTRACT.
12. WORKMANSHIP THROUGHOUT BE OF THE BEST QUALITY OF THE TRADE INVOLVED, AND SHALL MEET OR EXCEED THE FOLLOWING MINIMUM REFERENCE STANDARDS
FOR QUALITY AND PROFESSIONAL CONSTRUCTION PRACTICE:

NRCA

NATIONAL ROOFING CONTRACTORS ASSOCIATION
O'HARE INTERNATIONAL CENTER
10255 W. HIGGENS ROAD, SUITE 600
ROSEMONT, IL 60018

SMACNA

SHEET METAL AND AIR CONDITIONING CONTRACTORS NATIONAL ASSOCIATION
4201 LAFAYETTE CENTER DRIVE
CHATILLY, VA 22021-1209

ITLP

INTERNATIONAL INSTITUTE FOR LATH AND PLASTER

820 ANSFER ROAD ST. PAUL, MN
55114-1406821

13. INSTALL ALL EQUIPMENT AND MATERIALS PER THE LATEST EDITION OF THE MANUFACTURER'S INSTALLATION SPECIFICATIONS UNLESS SPECIFICALLY OTHERWISE INDICATED, OR WHERE LOCAL CODES OR REGULATIONS TAKE PRECEDENCE.
14. THE CONTRACTOR SHALL VERIFY, COORDINATE, AND OVIDE ALL NECESSARY BLOCKING, BACKING, FRAMING, HANGERS OR OTHER SUPPORTS FOR ALL ITEMS REQUIRING THE SAME.
15. THE CONTRACTOR AND ALL SUBCONTRACTORS SHALL GIVE ALL NOTICES AND SHALL COMPLY WITH ALL APPLICABLE LOCAL CODES, REGULATIONS, LAWS AND ORDINANCES AS WELL AS STATE DEPARTMENT OF INDUSTRIAL REGULATIONS AND DIVISION OF INDUSTRIAL SAFETY (OSHA) REQUIREMENTS.
16. THE CONTRACTOR SHALL PROTECT THE PROPERTY OWNERS, AND 'T-MOBILE' PROPERTY FROM DAMAGE WHICH MAY OCCUR DURING CONSTRUCTION. ANY DAMAGE TO NEW AND EXISTING FINISHES, CONSTRUCTION, STRUCTURE, LANDSCAPING, CURBS, STAIRS, OR EQUIPMENT, ETC. SHALL BE IMMEDIATELY REPAIRED OR REPLACED TO THE SATISFACTION OF 'T-MOBILE', AND THE PROPERTY OWNER, OR THE OWNER'S REPRESENTATIVE, AT THE EXPENSE OF THE CONTRACTOR.
17. THE CONTRACTOR SHALL BE RESPONSIBLE FOR, AND SHALL REPLACE OR REMEDY, ANY FAULTY, IMPROPER, OR INFERIOR MATERIALS OR WORKMANSHIP OR ANY DAMAGE WHICH SHALL APPEAR WITHIN ONE YEAR AFTER THE COMPLETION AND ACCEPTANCE OF THE WORK BY 'T-MOBILE' UNDER THIS CONTRACT.
18. IT SHALL BE THE RESPONSIBILITY OF THE GENERAL CONTRACTOR TO LOCATE ALL EXISTING UTILITIES, OR CONTACT AN OUTSIDE AGENCY TO LOCATE ALL EXISTING UTILITIES. WHETHER SHOWN HERE IN OR NOT, AND TO PROTECT THEM FROM DAMAGE. THE CONTRACTOR SHALL BEAR ALL EXPENSES FOR REPAIR OR REPLACEMENT OF UTILITIES OR OTHER PROPERTY DAMAGE IN CONJUNCTION WITH THE EXECUTION OF WORK.
19. THE CONTRACTOR SHALL BE RESPONSIBLE FOR THE COMPLETE SECURITY OF THE PROJECT SITE WHILE THE JOB IS IN PROGRESS AND UNTIL THE JOB IS COMPLETED AND ACCEPTED BY 'T-MOBILE'.
20. THE CONTRACTOR SHALL PROVIDE TEMPORARY WATER, POWER AND TOILET FACILITIES AS REQUIRED BY THE PROPERTY OWNER, 'T-MOBILE' AND THE CITY OR GOVERNING AGENCY.
21. THE GENERAL CONTRACTOR IS RESPONSIBLE FOR REDLINING THE CONSTRUCTION DOCUMENTS TO ILLUSTRATE THE AS-BUILT CONDITION OF THE SITE. THIS SHALL BE DONE AFTER THE SITE HAS BEEN AWARDED FINAL INSPECTION BY THE RESPONSIBLE BUILDING AGENCY. ONE SET OF REDLINED DRAWINGS SHALL BE PROVIDED TO THE "T-MOBILE' CONSTRUCTION MANAGER.
22. THE LATEST EDITION OF ALL PERMITTED AND APPROVED PLANS PERTAINING TO THIS PROJECT SHALL BE KEPT IN A PLAN BOX AND NOT BE USED BY WORKERS. ALL CONSTRUCTION SETS SHALL REFLECT THE SAME INFORMATION. THE CONTRACTOR SHALL ALSO MAINTAIN IN GOOD CONDITION, ONE COMPLETE SET OF PLANS WITH ALL REVISIONS, ADDENDA AND CHANGE ORDERS ON THE PREMISES AT ALL TIMES. THESE ARE TO BE UNDER THE CARE OF THE JOB SUPERINTENDENT.
23. THE CONTRACTOR SHALL REMOVE ALL RUBBISH AND WASTE MATERIALS ON A DAILY BASIS, EXCEPT FOR THAT SPECIFIED AS REMAINING THE PROPERTY OF THE BUILDING OR PROPERTY OWNER AND SHALL EXERCISE STRICT CONTROL OVER JOB CLEANING THROUGHOUT CONSTRUCTION, INCLUDING FINAL CLEAN-UP UPON COMPLETION OF WORK. ALL AREAS ARE TO BE LEFT IN A BROOM CLEAN CONDITION AT THE END OF EACH DAY AND VACUUM CLEAN CONDITION, FREE FROM PAINT, SPOTS, DUST OR SMUDGES OF ANY NATURE TO COMPLETION OF WORK.
24. THE GENERAL CONTRACTOR MUST PERFORM WORK DURING PROPERTY OWNER'S PREFERRED HOURS TO AVOID DISRUPTION OF NORMAL ACTIVITY.
25. ALL EXPOSED METAL SHALL BE HOT-DIPPED GALVANIZED.
26. SEAL ALL PENETRATIONS THROUGH FIRE-RATED AREAS WITH U.L. LISTED OR FIRE MARSHALL APPROVED MATERIALS IF AND WHERE APPLICABLE TO THIS FACILITY AND PROJECT SITE.
27. PROVIDE A PORTABLE FIRE EXTINGUISHER WITH A RATING OF NOT LESS THAN 2-A OR 2-A 1 OBC WITHIN 75 FEET TRAVEL DISTANCE TO ALL PORTIONS OF THE PROJECT AREA CONSTRUCTION.
28. ELECTRICAL AND POWER SYSTEM SHALL BE GROUNDED PER NEC ARTICLES 250 AND 810.
29. ALL NEW OPENINGS IN THE EXTERIOR ENVELOPE OF CONDITIONED SPACES SUCH AS AT WALL AND ROOF PENETRATIONS SHALL BE CAULKED OR SEALED TO LIMIT INFILTRATION OF AIR AND MOISTURE.
30. UPON COMPLETION OF CONSTRUCTION, 'T-MOBILE' CONSTRUCTION MANAGER SHALL CONDUCT A WALK-THRU WITH PROPERTY OWNER OR REPRESENTATIVE OF PROPERTY OWNER.
31. THE CONTRACTOR SHALL BE RESPONSIBLE FOR MAINTAINING ALL SYSTEM EQUIPMENT IN A CLEAN WORKING ORDER UNTIL ACCEPTANCE OF THE PROJECT BY 'T-MOBILE'.
32. INSTALL ALL EQUIPMENT AND MATERIALS PER THE LATEST EDITION OF THE MANUFACTURER'S INSTALLATION SPECIFICATIONS UNLESS SPECIFICALLY OTHERWISE INDICATED, OR WHERE LOCAL CODES OR REGULATION TAKE PRECEDENCE.

GENERAL CONSTRUCTION NOTES

1. THE FACILITY IS AN UNOCCUPIED TELECOMMUNICATION FACILITY.
2. PLANS ARE NOT TO BE SCALED AND ARE INTENDED TO BE A DIAGRAMMATIC OUTLINE ONLY, UNLESS NOTED OTHERWISE. THE WORK
SHALL INCLUDE FURNISHING MATERIALS, EQUIPMENT, APPURTENANCES
AND LABOR NECESSARY TO COMPLETE ALL INSTALLATIONS AS INDICATED ON THE DRAWINGS.
3. PRIOR TO THE SUBMISSION OF BIDS, THE CONTRACTORS SHALL VISIT
THE JOB SITE AND BE RESPONSIBLE FOR ALL CONTRACT DOCUMENTS, FIELD CONDITIONS AND DIMENSIONS, AND CONFIRMING
THAT THE WORK MAY BE ACCOMPLISHED AS SHOWN PRIOR TO PROCEEDING WITH CONSTRUCTION. ANY DISCREPANCIES ARE TO BE
BROUGHT TO THE ATTENTION OF THE IMPLEMENTATION ENGINEER AND
ARCHITECT AND/OR ENGINEER PRIOR TO PROCEEDING WITH THE WORK.
4. THE CONTRACTOR SHALL RECEIVE, IN WRITING, AUTHORIZATION TO PROCEED BEFORE STARTING WORK ON ANY ITEM NOT CLEARLY DEFINED OR IDENTIFIED BY THE CONTRACT DOCUMENTS.
5. CONTRACTOR SHALL CONTACT USA ALERT BEFORE PROCEEDING WITH
ANY EXCAVATION, SITE WORK OR CONSTRUCTION.
6. THE CONTRACTOR SHALL INSTALL ALL EQUIPMENT AND MATERIALS IN
ACCORDANCE WITH MANUFACTURER'S RECOMMENDATIONS UNLESS SPECIFICALLY INDICATED OTHERWISE OR WHERE LOCAL CODES OR REGULATIONS TAKE PRECEDENCE.
7. ALL WORK PERFORMED AND MATERIALS INSTALLED SHALL BE IN STRICT ACCORDANCE WITH ALL APPLICABLE CODES, REGULATIONS AND
ORDINANCES. CONTRACTOR SHALL GIVE ALL NOTICES AND COMPLY WITH ALL LAWS, ORDINANCES, RULES, REGULATIONS AND LAWFUL ORDERS OF ANY PUBLIC AUTHORITY REGARDING THE PERFORMANCE
OF THE WORK. MECHANICAL AND ELECTRICAL SYSTEMS SHALL BE INSTALLED IN ACCORDANCE WITH ALL APPLICABLE MUNICIPAL AND UTILITY COMPANY SPECIFICATIONS, AND LOCAL AND STATE JURISDICTIONAL CODES, ORDINANCES AND APPLICABLE REGULATIONS.
8. THE GENERAL CONTRACTOR SHALL SUPERVISE AND DIRECT THE WORK, USING THE BEST SKILLS AND ATTENTION. THE CONTRACTOR
SHALL BE SOLELY RESPONSIBLE FOR ALL CONSTRUCTION MEANS, METHODS, TECHNIQUES, SEQUENCES AND PROCEDURES AND FOR COORDINATING ALL PORTIONS OF THE WORK UNDER THE CONTRACT
INCLUDING CONTACT AND COORDINATION WITH THE IMPLEMENTATION
ENGINEER AND WITH THE LANDLORD'S AUTHORIZED REPRESENTATIVE.
9. DETAILS ARE INTENDED TO SHOW END RESULT OF DESIGN. MINOR MODIFICATION MAY BE REQUIRED TO SUIT JOB DIMENSIONS OR CONDITIONS, AND SUCH MODIFICATIONS SHALL BE INCLUDED AS PART
OF THE WORK.
10. THE CONTRACTOR SHALL MAKE NECESSARY PROVISIONS TO PROTECT
EXISTING IMPROVEMENTS, PAVING, CURBS, VEGETATION, GALVANIZED
SURFACES, ETC., AND UPON COMPLETION OF WORK REPAIR ANY DAMAGE THAT OCCURRED DURING CONSTRUCTION TO THE SATISFACTION OF 'T-MOBILE'.
11. KEEP GENERAL AREA CLEAN, HAZARD FREE, AND DISPOSE OF ALL
DIRT, DEBRIS, RUBBISH AND REMOVE EQUIPMENT NOT SPECIFIED AS
REMAINING ON THE PROPERTY. LEAVE PREMISES IN CLEAN CONDITION
AND FREE FROM PAINT SPOTS, DUST OR SMUDGES OF ANY NATURE.
12. PENETRATIONS OF ROOF MEMBRANES SHALL BE PATCHED AND/OR
FLASHED AND MADE WATERTIGHT USING LIKE MATERIALS IN ACCORDANCE WITH NRCA ROOFING STANDARDS AND DETAILS. CONTRACTOR SHALL OBTAIN DETAILING CLARIFICATION FOR SITE-SPECIFIC CONDITIONS FROM ARCHITECT/ENGINEER, IF NECESSARY, BEFORE PROCEEDING.
13. ANY ARCHITECT/ENGINEER AND REPRESENTATIVES OF THE LESSEE
AND OWNER, MUST BE NOTIFIED AT LEAST TWO FULL DAYS PRIOR TO
COMMENCEMENT OF CONSTRUCTION.
14. DO NOT EXCAVATE OR DISTURB SOILS BEYOND THE PROPERTY LINES
OR LEASE LINES, UNLESS SPECIFICALLY INSTRUCTED, IN WRITING, BY
THE ARCHITECT/ENGINEER AND LESSEE.
15. DO NOT SCALE BUILDING DIMENSIONS FROM DRAWINGS.

T-Mobile
stick together
12050 BALTIMORE AVENUE
BELTSVILLE, MD 20705

smartlink
1362 MELLON ROAD, SUITE 140,
HANOVER, MD 21076

Trylon
1825 W. WALNUT HILL LANE, SUITE 302
IRVING, TEXAS 75038
1-855-669-5421

STATE OF MARYLAND
JINSHAN WANG
Sep 08,2020
54187
PROFESSIONAL ENGINEER

PROFESSIONAL CERTIFICATE
I HEREBY CERTIFY THAT THESE DOCUMENTS WERE PREPARED OR APPROVED BY ME, AND THAT I AM A DULY LICENSED PROFESSIONAL ENGINEER UNDER THE LAWS OF THE STATE OF MARYLAND, LICENSE NO 54187, EXPIRATION DATE 04/11/2021

DRAWING SCALES ARE INTENDED FOR 11"x17" OR 24"x36" SIZE PRINTED MEDIA ONLY.

SUBMITTALS

REV	DATE	DESCRIPTION	BY
A	08/21/20	90% CD	RC
0	09/07/20	100% CD	KZ

SITE INFORMATION

SITE NAME:
TOWN OF WESTMINSTER – WT

SITE NUMBER:
7BAN231A

SITE ADDRESS:
41ST STREET
WESTMINSTER, MD 21157

SHEET DESCRIPTION
GENERAL NOTES

SHEET No.
GN-1

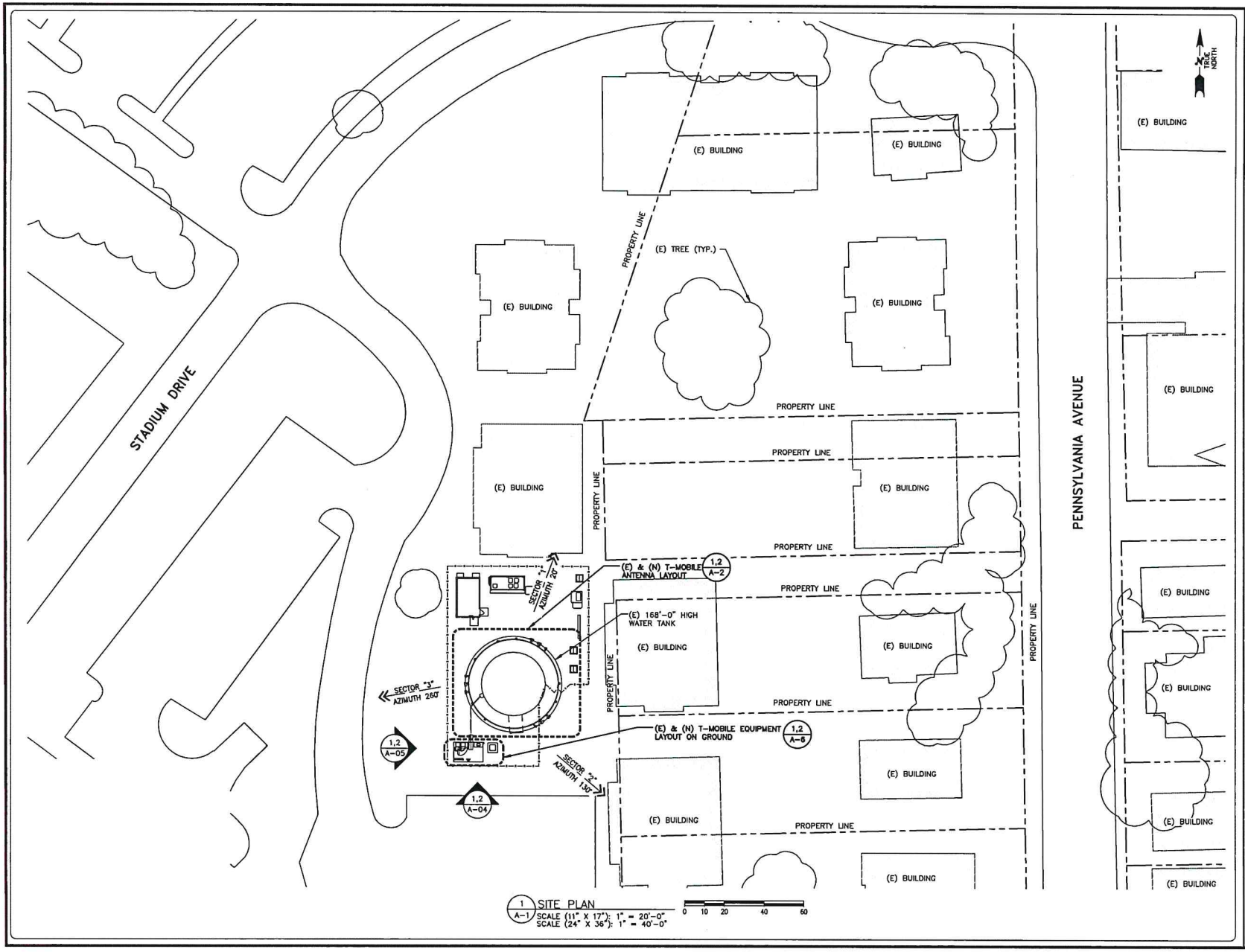

1 A-1 SITE PLAN
SCALE (11" X 17"): 1" = 20'-0"
SCALE (24" X 36"): 1" = 40'-0"

0 10 20 40 60

T-Mobile
stick together
12050 BALTIMORE AVENUE
BELTSVILLE, MD 20705

smartlink
1362 MELLON ROAD, SUITE 140,
HANOVER, MD 21076

Trylon
1825 W. WALNUT HILL LANE, SUITE 302
IRVING, TEXAS 75038
1-855-669-5421

STATE OF MARYLAND
JINGHAN WANG
Sep 08,2020
54187
PROFESSIONAL ENGINEER

PROFESSIONAL CERTIFICATE
I HEREBY CERTIFY THAT THESE DOCUMENTS WERE PREPARED OR APPROVED BY ME, AND THAT I AM A DULY LICENSED PROFESSIONAL ENGINEER UNDER THE LAWS OF THE STATE OF MARYLAND, LICENSE NO 54187, EXPIRATION DATE 04/11/2021

DRAWING SCALES ARE INTENDED FOR 11"x17" OR 24"x36" SIZE PRINTED MEDIA ONLY.

SUBMITTALS

REV	DATE	DESCRIPTION	BY
A	08/21/20	90% CD	RC
0	09/07/20	100% CD	KZ

SITE INFORMATION

SITE NAME:
TOWN OF WESTMINSTER – WT
SITE NUMBER:
7BAN231A
SITE ADDRESS:
41ST STREET
WESTMINSTER, MD 21157

SHEET DESCRIPTION
SITE PLAN

SHEET No.
A-1

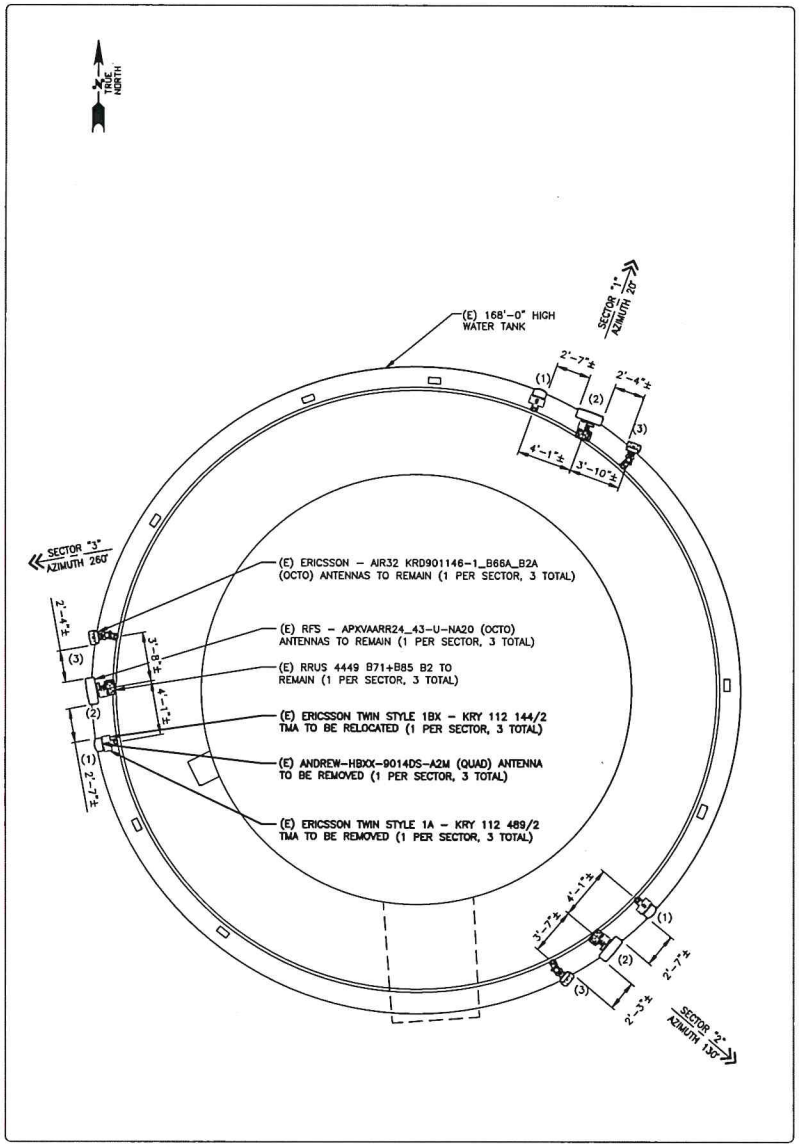

1 / A-2 EXISTING ANTENNA LAYOUT
SCALE (11" X 17"): 1/4" = 1'-0"
SCALE (24" X 36"): 1/8" = 1'-0"

0 2'-0" 4'-0" 8'-0" 12'-0"

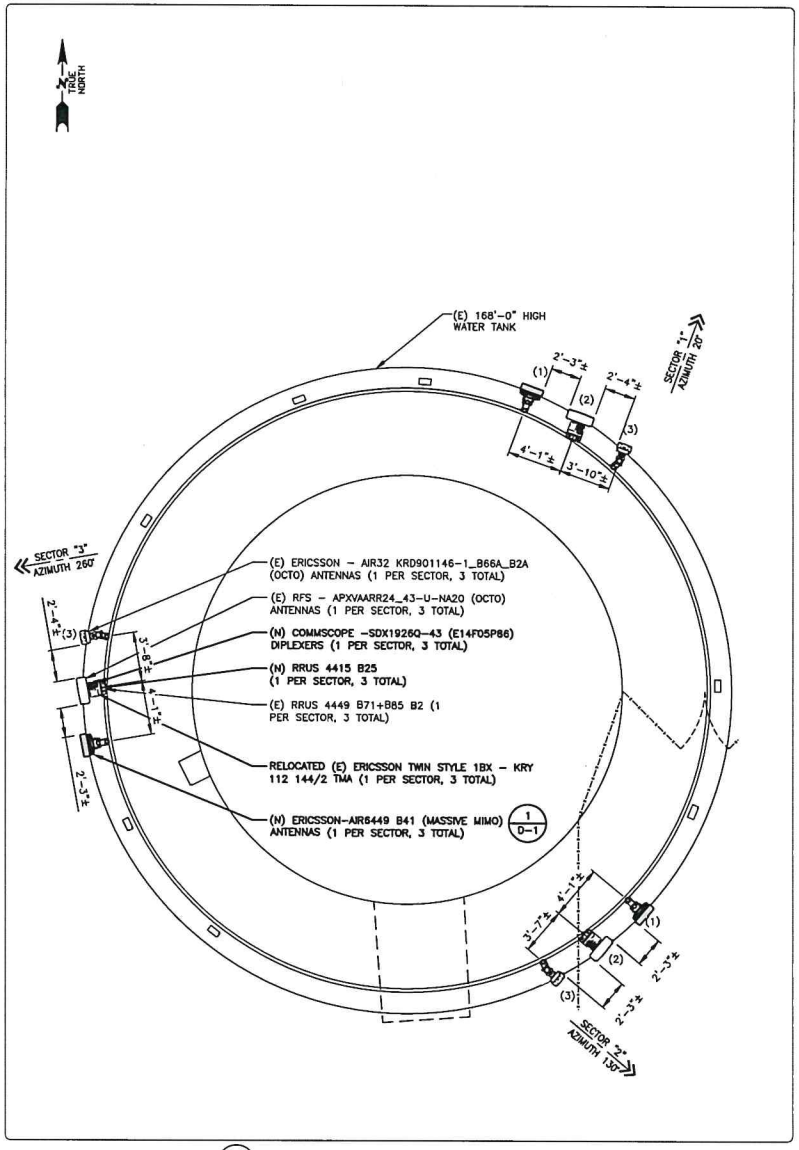

2 / A-2 PROPOSED ANTENNA LAYOUT
SCALE (11" X 17"): 1/4" = 1'-0"
SCALE (24" X 36"): 1/8" = 1'-0"

0 2'-0" 4'-0" 8'-0" 12'-0"

T-Mobile
stick together
12050 BALTIMORE AVENUE
BELTSVILLE, MD 20705

smartlink
1362 MELLON ROAD, SUITE 140,
HANOVER, MD 21076

Trylon
1825 W. WALNUT HILL LANE, SUITE 302
IRVING, TEXAS 75038
1-855-669-5421

STATE OF MARYLAND
JINSHAN WANG
54187
PROFESSIONAL ENGINEER
Sep 08, 2020

PROFESSIONAL CERTIFICATE
I HEREBY CERTIFY THAT THESE DOCUMENTS WERE PREPARED OR APPROVED BY ME, AND THAT I AM A DULY LICENSED PROFESSIONAL ENGINEER UNDER THE LAWS OF THE STATE OF MARYLAND, LICENSE NO 54187, EXPIRATION DATE 04/11/2021

DRAWING SCALES ARE INTENDED FOR 11"x17" OR 24"x36" SIZE PRINTED MEDIA ONLY.

SUBMITTALS

REV	DATE	DESCRIPTION	BY
A	08/21/20	90% CD	RC
A	09/07/20	100% CD	KZ

SITE INFORMATION

SITE NAME:
TOWN OF WESTMINSTER – WT

SITE NUMBER:
7BAN231A

SITE ADDRESS:
41ST STREET
WESTMINSTER, MD 21157

SHEET DESCRIPTION
ANTENNA LAYOUT

SHEET No.
A-2

7BAN231A ANTENNA AND EQUIPMENT SCHEDULE 7BAN231A_ANCHOR_4_2020-07-29

SECTOR		TECH	AZIMUTH	ANTENNA					RADIOS/TMAS	CABLES		
				MANUFACTURER	MODEL NO.	SIZE & WEIGHT	STATUS	RAD CENTER		TYPE	LENGTH	HYBRID CABLE
SECTOR '1'	1	U2100/ G1900	20°	ANDREW	HBXX-9014DS-A2M (QUAD)	51.6"x12.0"x6.5" (48.7 lbs)	EXISTING	168'-0"	-	(4) (E) 1-1/4" COAX	198'-0"	(3) (E) ERICSSON 6X12 HCS 6AWG 80M
	2	L700/ L600/ N600/	20°	RFS	APXVAARR24_43-U-NA20 (OCTO)	95.9"x24"x8.7" (128 lbs)	EXISTING	168'-0"	(1) (E) RRU 4449 B71+B85 (1) (E) TWIN STYLE1BK-KRY 112144/2 (1) (E) TWIN STYLE 1A-KRY 112 489/2	(2) (E) FIBER JUMPERS (4) (E) COAX JUMPERS	- 10'-0"	
	3	L2100/ L1900/	20°	ERICSSON	AIR32 KRD901146-1_B66A_B2A (OCTO)	56.6"x12.9"x8.7" (132.2 lbs)	EXISTING	168'-0"	-	(4) (E) FIBER JUMPERS	-	
SECTOR '2'	1	U2100/ G1900	130°	ANDREW	HBXX-9014DS-A2M (QUAD)	51.6"x12.0"x6.5" (48.7 lbs)	EXISTING	168'-0"	-	(4) (E) 1-1/4" COAX	198'-0"	
	2	L700/ L600/ N600/	130°	RFS	APXVAARR24_43-U-NA20 (OCTO)	95.9"x24"x8.7" (128 lbs)	EXISTING	168'-0"	(1) (E) RRU 4449 B71+B85 (1) (E) TWIN STYLE1BK-KRY 112144/2 (1) (E) TWIN STYLE 1A-KRY 112 489/2	(2) (E) FIBER JUMPERS (4) (E) COAX JUMPERS	- 10'-0"	
	3	L2100/ L1900/	130°	ERICSSON	AIR32 KRD901146-1_B66A_B2A (OCTO)	56.6"x12.9"x8.7" (132.2 lbs)	EXISTING	168'-0"	-	(4) (E) FIBER JUMPERS	-	
SECTOR '3'	1	U2100/ G1900	260°	ANDREW	HBXX-9014DS-A2M (QUAD)	51.6"x12.0"x6.5" (48.7 lbs)	EXISTING	168'-0"	-	(4) (E) 1-1/4" COAX	198'-0"	
	2	L700/ L600/ N600/	260°	RFS	APXVAARR24_43-U-NA20 (OCTO)	95.9"x24"x8.7" (128 lbs)	EXISTING	168'-0"	(1) (E) RRU 4449 B71+B85 (1) (E) TWIN STYLE1BK-KRY 112144/2 (1) (E) TWIN STYLE 1A-KRY 112 489/2	(2) (E) FIBER JUMPERS (4) (E) COAX JUMPERS	- 10'-0"	
	3	L2100/ L1900/	260°	ERICSSON	AIR32 KRD901146-1_B66A_B2A (OCTO)	56.6"x12.9"x8.7" (132.2 lbs)	EXISTING	168'-0"	-	(4) (E) FIBER JUMPERS	-	

1 / A-3 ANTENNA SCHEDULE
SCALE: N.T.S

7BAN231A ANTENNA AND EQUIPMENT SCHEDULE 7BAN231A_ANCHOR_4_2020-07-29

SECTOR		TECH	AZIMUTH	ANTENNA					RADIOS/TMA/DIPLEXERS	CABLES		
				MANUFACTURER	MODEL NO.	SIZE & WEIGHT	STATUS	RAD CENTER		TYPE	LENGTH	HYBRID CABLE
SECTOR '1'	1	L2500 N2500	20°	ERICSSON	AIR6449 B41 (MASSIVE MIMO)	33.1"x20.5"x8.6" (104.0 lbs)	NEW	168'-0"	-	(4) (H) FIBER JUMPERS	-	(3) (E) ERICSSON 6X12 HCS 6AWG 80M (3) (H) ERICSSON 6x12 HCS 6AWG 80m
	2	L700/L600/ N600/ L1900/ U2100	20°	RFS	APXVAARR24_43-U-NA20 (OCTO)	95.9"x24"x8.7" (128 lbs)	EXISTING	168'-0"	(1) (E) TWIN STYLE1BK-KRY 112144/2 TMA (1) (E) RRU 4449 B71+B85 (1) (H) RRU 4415 B25 (1) (H) COMMSCOPE-DIPLEXERS SDX19260-43(E14F05P86)	(4) (H) FIBER JUMPERS (8) (H) COAX JUMPERS (2) (H) 1-1/4" COAX	- 10'-0" 198'-0"	
	3	L2100/ L1900/ G1900	20°	ERICSSON	AIR32 KRD901146-1_B66A_B2A (OCTO)	56.6"x12.9"x8.7" (132.2 lbs)	NEW	168'-0"	-	(4) (E) FIBER JUMPERS	-	
SECTOR '2'	1	L2500 N2500	130°	ERICSSON	AIR6449 B41 (MASSIVE MIMO)	33.1"x20.5"x8.6" (104.0 lbs)	NEW	168'-0"	-	(4) (H) FIBER JUMPERS	-	
	2	L700/L600/ N600/ L1900/ U2100	130°	RFS	APXVAARR24_43-U-NA20 (OCTO)	95.9"x24"x8.7" (128 lbs)	EXISTING	168'-0"	(1) (E) TWIN STYLE1BK-KRY 112144/2 TMA (1) (E) RRU 4449 B71+B85 (1) (H) RRU 4415 B25 (1) (H) COMMSCOPE-DIPLEXERS SDX19260-43(E14F05P86)	(4) (H) FIBER JUMPERS (8) (H) COAX JUMPERS (2) (H) 1-1/4" COAX	- 10'-0" 198'-0"	
	3	L2100/ L1900/ G1900	130°	ERICSSON	AIR32 KRD901146-1_B66A_B2A (OCTO)	56.6"x12.9"x8.7" (132.2 lbs)	NEW	168'-0"	-	(4) (E) FIBER JUMPERS	-	
SECTOR '3'	1	L2500 N2500	260°	ERICSSON	AIR6449 B41 (MASSIVE MIMO)	33.1"x20.5"x8.6" (104.0 lbs)	NEW	168'-0"	-	(4) (H) FIBER JUMPERS	-	
	2	L700/L600/ N600/ L1900/ U2100	260°	RFS	APXVAARR24_43-U-NA20 (OCTO)	95.9"x24"x8.7" (128 lbs)	EXISTING	168'-0"	(1) (E) TWIN STYLE1BK-KRY 112144/2 TMA (1) (E) RRU 4449 B71+B85 (1) (H) RRU 4415 B25 (1) (H) COMMSCOPE-DIPLEXERS SDX19260-43(E14F05P86)	(4) (H) FIBER JUMPERS (8) (H) COAX JUMPERS (2) (H) 1-1/4" COAX	- 10'-0" 198'-0"	
	3	L2100/ L1900/ G1900	260°	ERICSSON	AIR32 KRD901146-1_B66A_B2A (OCTO)	56.6"x12.9"x8.7" (132.2 lbs)	NEW	168'-0"	-	(4) (E) FIBER JUMPERS	-	

1 / A-3 ANTENNA SCHEDULE
SCALE: N.T.S

T-Mobile
stick together
12050 BALTIMORE AVENUE
BELTSVILLE, MD 20705

smartlink
1362 MELLON ROAD, SUITE 140,
HANOVER, MD 21076

Trylon
1825 W. WALNUT HILL LANE, SUITE 302
IRVING, TEXAS 75038
1-855-669-5421

STATE OF MARYLAND
JINSHAN WANG
Sep 04, 2020
54187
PROFESSIONAL ENGINEER

PROFESSIONAL CERTIFICATE
I HEREBY CERTIFY THAT THESE DOCUMENTS WERE PREPARED OR APPROVED BY ME, AND THAT I AM A DULY LICENSED PROFESSIONAL ENGINEER UNDER THE LAWS OF THE STATE OF MARYLAND, LICENSE NO 54187, EXPIRATION DATE 04/11/2021

DRAWING SCALES ARE INTENDED FOR 11"x17" OR 24"x36" SIZE PRINTED MEDIA ONLY.

SUBMITTALS

REV	DATE	DESCRIPTION	BY
A	08/21/20	90% CD	RC
0	09/07/20	100% CD	KZ

SITE INFORMATION

SITE NAME:
TOWN OF WESTMINSTER – WT
SITE NUMBER:
7BAN231A
SITE ADDRESS:
41ST STREET
WESTMINSTER, MD 21157

SHEET DESCRIPTION
ANTENNA SCHEDULE

SHEET No.
A-3

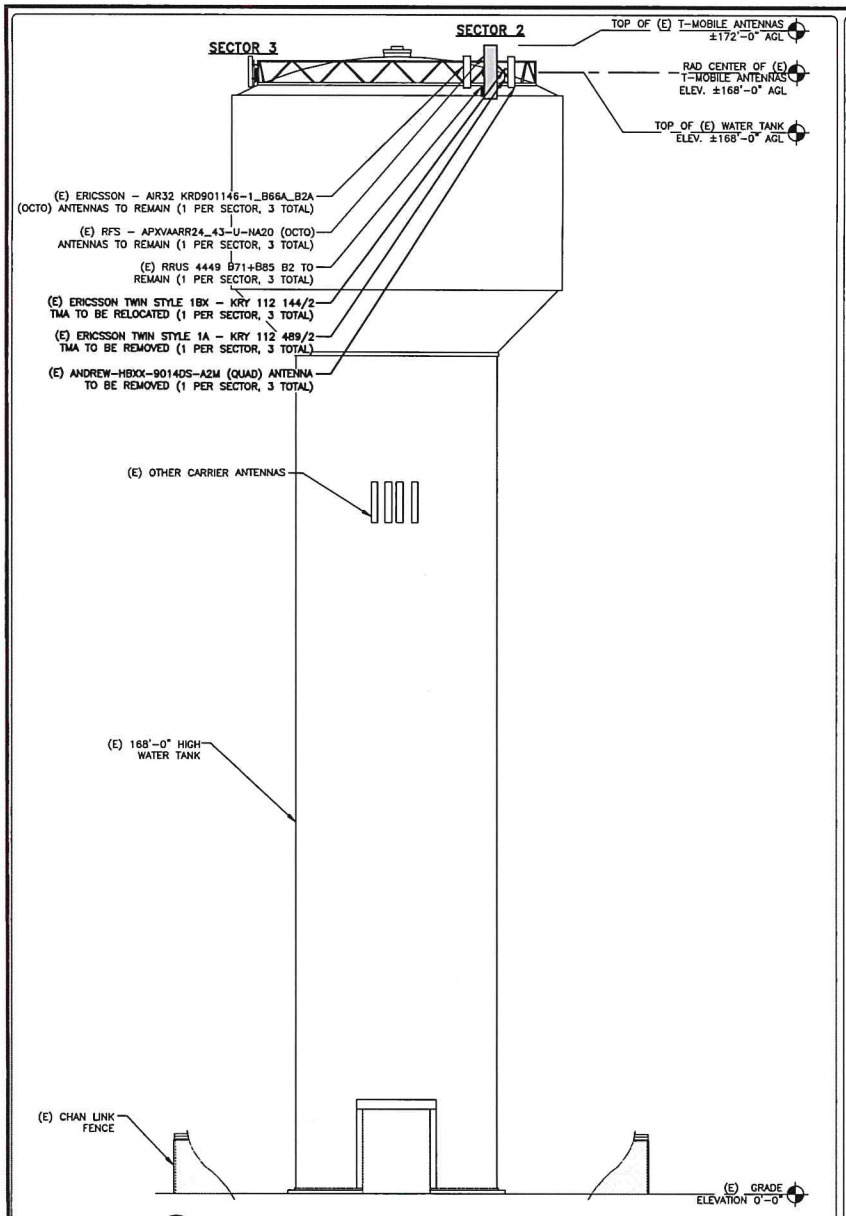

1 A-4 EXISTING SOUTH ELEVATION
SCALE (11" X 17"): 1/8" = 1'-0"
SCALE (24" X 36"): 1/16" = 1'-0"

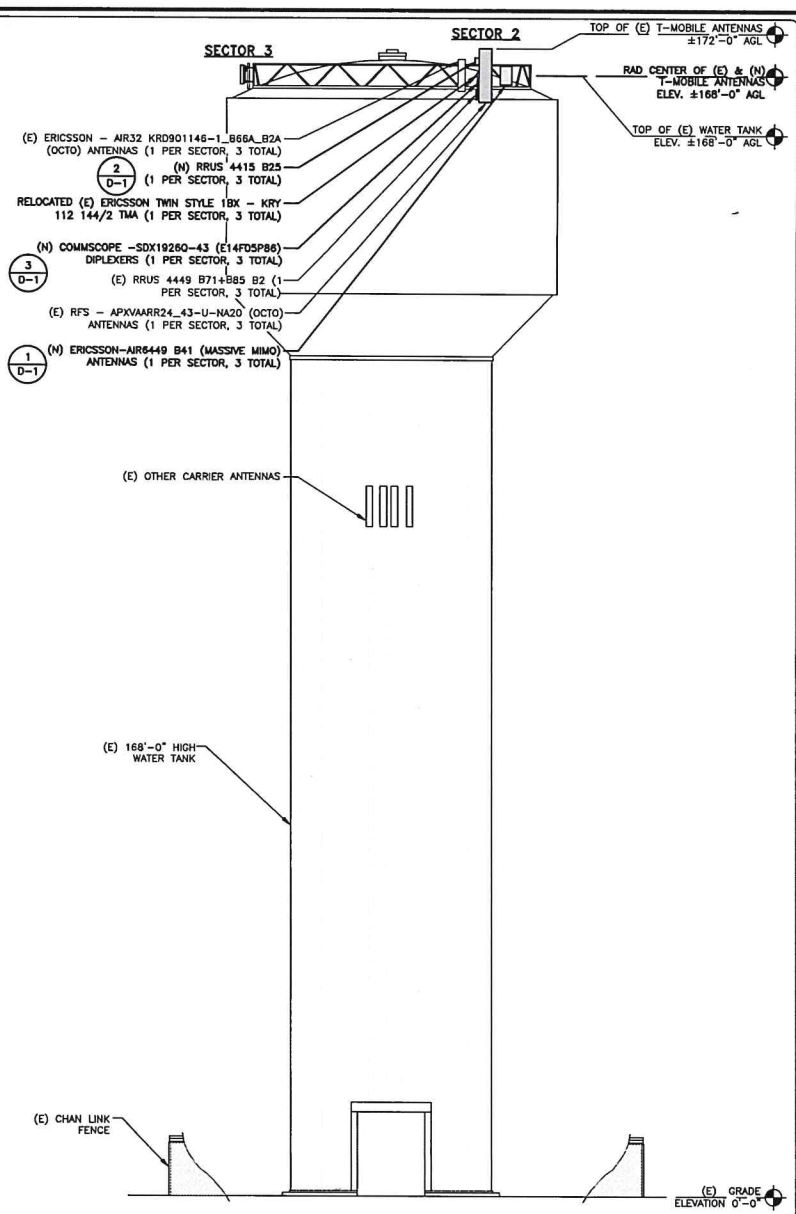

2 A-4 NEW SOUTH ELEVATION
SCALE (11" X 17"): 1/8" = 1'-0"
SCALE (24" X 36"): 1/16" = 1'-0"

T-Mobile stick together
12050 BALTIMORE AVENUE
BELTSVILLE, MD 20705

smartlink
1362 MELLON ROAD, SUITE 140,
HANOVER, MD 21076

Trylon
1825 W. WALNUT HILL LANE, SUITE 302
IRVING, TEXAS 75038
1-855-569-5421

STATE OF MARYLAND
JINSHAN WANG
Sep 08,2020
54187
PROFESSIONAL ENGINEER

PROFESSIONAL CERTIFICATE
I HEREBY CERTIFY THAT THESE DOCUMENTS WERE PREPARED OR APPROVED BY ME, AND THAT I AM A DULY LICENSED PROFESSIONAL ENGINEER UNDER THE LAWS OF THE STATE OF MARYLAND, LICENSE NO 54187, EXPIRATION DATE 04/11/2021

DRAWING SCALES ARE INTENDED FOR 11"x17" OR 24"x36" SIZE PRINTED MEDIA ONLY.

SUBMITTALS

REV	DATE	DESCRIPTION	BY
A	08/21/20	90% CD	RC
0	09/07/20	100% CD	KZ

SITE INFORMATION

SITE NAME:
TOWN OF WESTMINSTER – WT
SITE NUMBER:
7BAN231A
SITE ADDRESS:
41ST STREET
WESTMINSTER, MD 21157

SHEET DESCRIPTION
ELEVATION VIEWS

SHEET No.
A-4

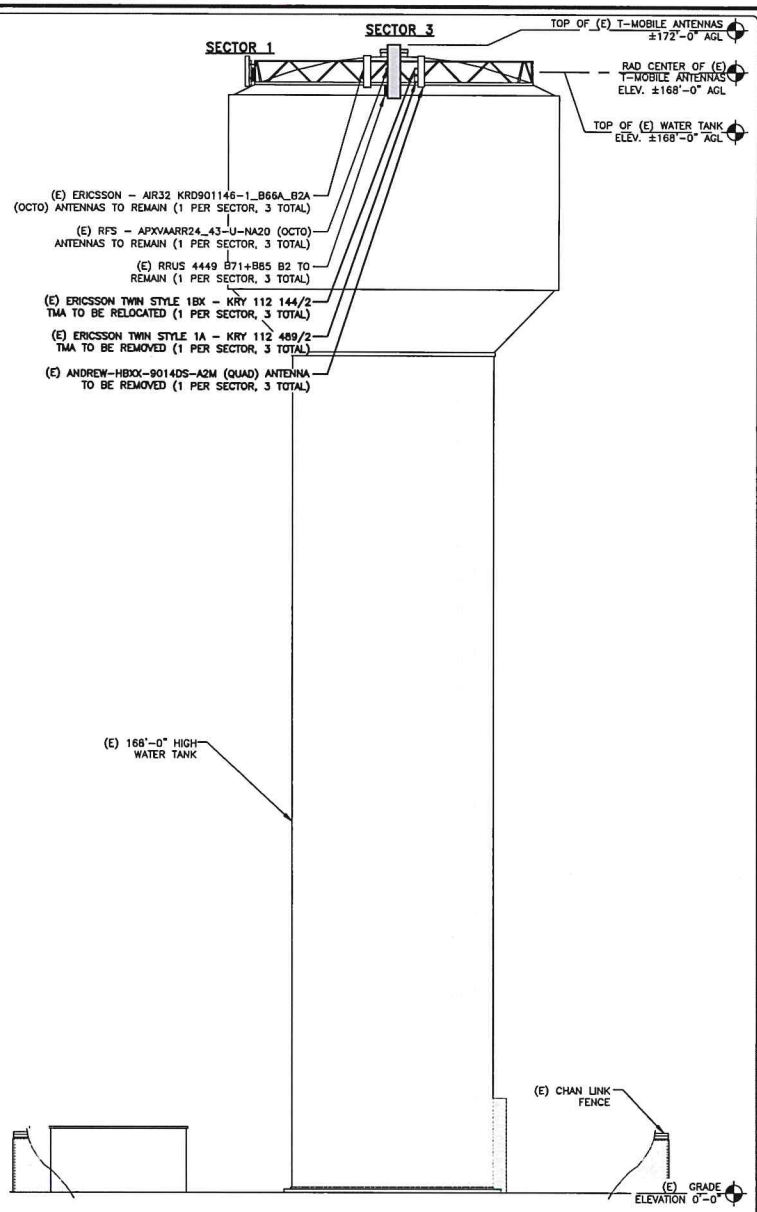

1 A-5 EXISTING WEST ELEVATION
SCALE (11" X 17"): 1/8" = 1'-0"
SCALE (24" X 36"): 1/16" = 1'-0"
0 4'-0" 8'-0" 16'-0" 24'-0"

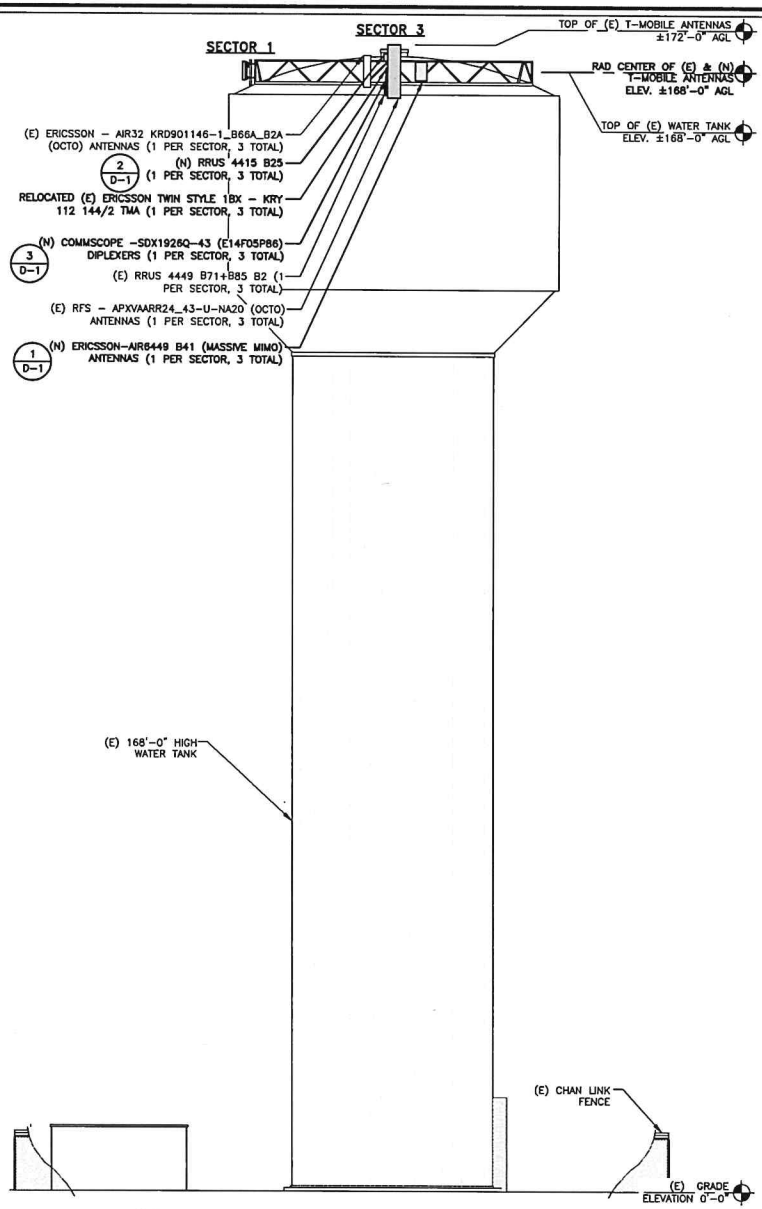

2 A-5 NEW WEST ELEVATION
SCALE (11" X 17"): 1/8" = 1'-0"
SCALE (24" X 36"): 1/16" = 1'-0"
0 4'-0" 8'-0" 16'-0" 24'-0"

T-Mobile
stick together
12050 BALTIMORE AVENUE
BELTSVILLE, MD 20705

smartlink
1362 MELLON ROAD, SUITE 140,
HANOVER, MD 21076

Trylon
1825 W. WALNUT HILL LANE, SUITE 302
IRVING, TEXAS 75038
1-855-569-5421

STATE OF MARYLAND
JINSHAN WANG
Sep 08,2020
54187
PROFESSIONAL ENGINEER

PROFESSIONAL CERTIFICATE
I HEREBY CERTIFY THAT THESE DOCUMENTS WERE PREPARED OR APPROVED BY ME, AND THAT I AM A DULY LICENSED PROFESSIONAL ENGINEER UNDER THE LAWS OF THE STATE OF MARYLAND, LICENSE NO 54187, EXPIRATION DATE 04/11/2021

DRAWING SCALES ARE INTENDED FOR 11"x17" OR 24"x36" SIZE PRINTED MEDIA ONLY.

SUBMITTALS

REV	DATE	DESCRIPTION	BY
A	08/21/20	90% CD	RC
0	09/07/20	100% CD	KZ

SITE INFORMATION

SITE NAME:
TOWN OF WESTMINSTER – WT
SITE NUMBER:
7BAN231A
SITE ADDRESS:
41ST STREET
WESTMINSTER, MD 21157

SHEET DESCRIPTION
ELEVATION VIEWS

SHEET No.
A-5

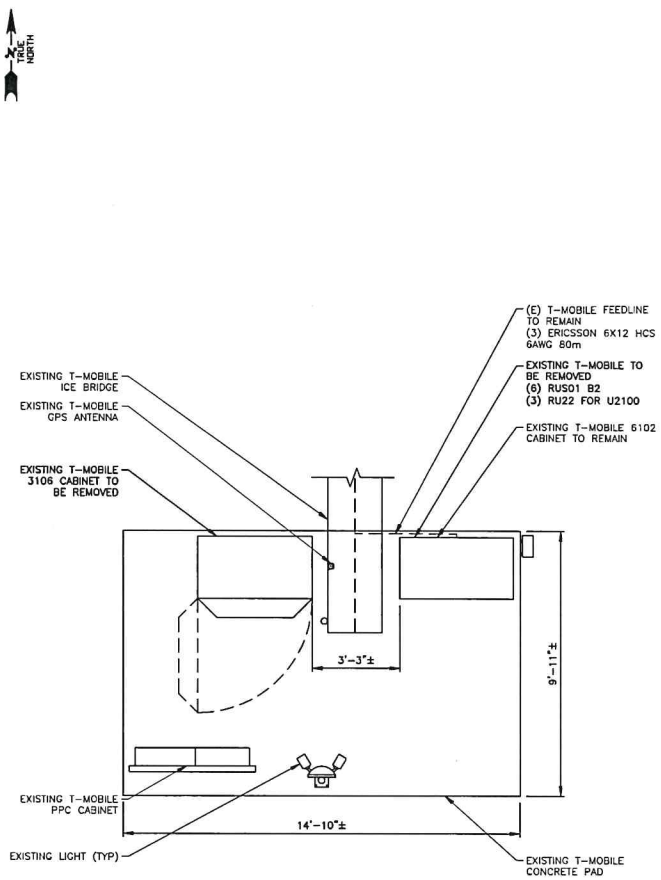

1 A-6 EXISTING EQUIPMENT LAYOUT
SCALE (11" X 17"): 1/2" = 1'-0"
SCALE (24" X 36"): 1" = 1'-0"
0 1'-0" 2'-0" 4'-0" 6'-0"

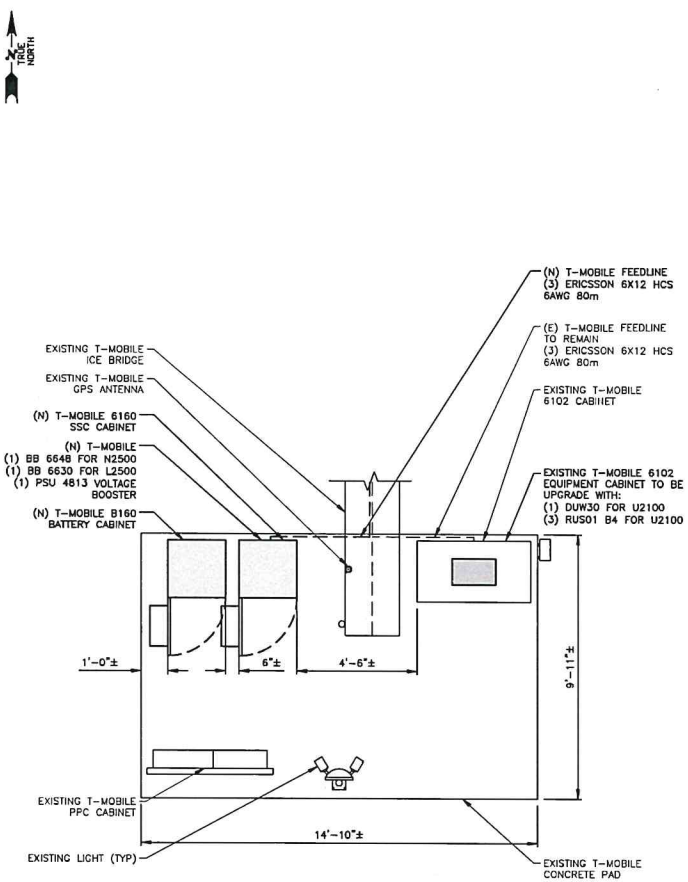

2 A-6 PROPOSED EQUIPMENT LAYOUT
SCALE (11" X 17"): 1/2" = 1'-0"
SCALE (24" X 36"): 1" = 1'-0"
0 1'-0" 2'-0" 4'-0" 6'-0"

T-Mobile
stick together
12050 BALTIMORE AVENUE
BELTSVILLE, MD 20705

smartlink
1362 MELLON ROAD, SUITE 140,
HANOVER, MD 21076

Trylon
1825 W. WALNUT HILL LANE, SUITE 302
IRVING, TEXAS 75038
1-855-669-5421

STATE OF MARYLAND
JINSHAN WANG
Sep 08, 2020
54187
PROFESSIONAL ENGINEER

PROFESSIONAL CERTIFICATE
I HEREBY CERTIFY THAT THESE DOCUMENTS WERE PREPARED OR APPROVED BY ME, AND THAT I AM A DULY LICENSED PROFESSIONAL ENGINEER UNDER THE LAWS OF THE STATE OF MARYLAND, LICENSE NO 54187, EXPIRATION DATE 04/11/2021

DRAWING SCALES ARE INTENDED FOR 11"x17" OR 24"x36" SIZE PRINTED MEDIA ONLY.

SUBMITTALS

REV	DATE	DESCRIPTION	BY
A	08/21/20	90% CD	RC
0	09/07/20	100% CD	KZ

SITE INFORMATION

SITE NAME:
TOWN OF WESTMINSTER – WT
SITE NUMBER:
7BAN231A
SITE ADDRESS:
41ST STREET
WESTMINSTER, MD 21157

SHEET DESCRIPTION
EQUIPMENT LAYOUT

SHEET No.
A-6

ERICSSON – AIR6449 B41	
RADOME MATERIAL	FIBERGLASS
RADOME COLOR	LIGHT GRAY
BAND	41
DIMENSIONS (HxWxD)	33.1"x20.5"x8.6"
WEIGHT W/O MOUNTING KIT	104.0 LBS.

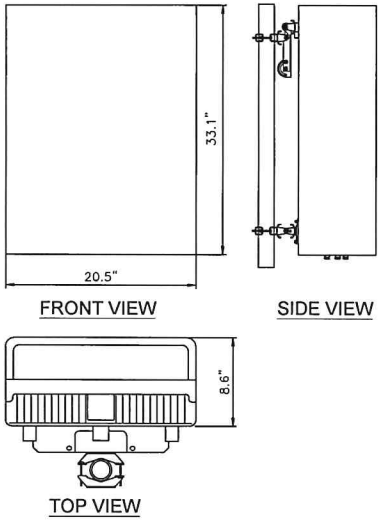

1 D-1 ERICSSON – AIR6449 B41 ANTENNA SPECIFICATIONS
SCALE: N.T.S

MANUFACTURER:		ERICSSON
MODEL NO.:		RRUS 4415 B25
DIMENSIONS:		TOTAL WEIGHT :
A	15"	48.5 LBS (21.7 Kg)
B	13.2"	
C	5.8"	

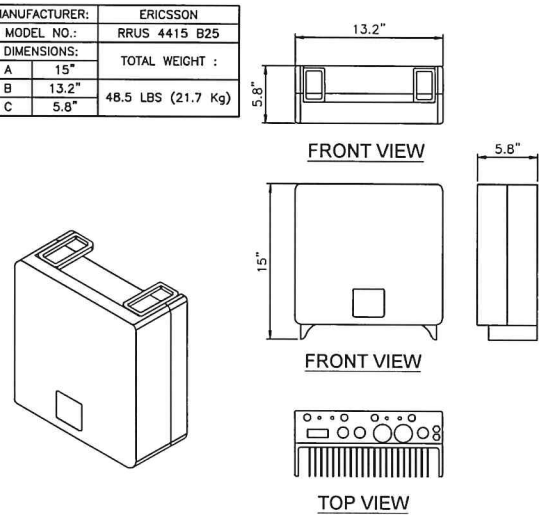

2 D-1 ERICSSON RRUS 4415 B25
SCALE: N.T.S

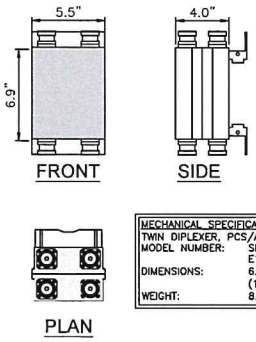

MECHANICAL SPECIFICATIONS:
TWIN DIPLEXER, PCS/AWS+WCS
MODEL NUMBER: SDX1926Q-43
E14F05P86
DIMENSIONS: 6.9"x5.5"x4.0"
(176.5x140.0x101.0mm)
WEIGHT: 8.4lbs (3.8kg)

3 D-1 (N) COMMSCOPE-SDX1926Q-43(E14F05P86) DIPLEXERS DETAILS
SCALE: N.T.S

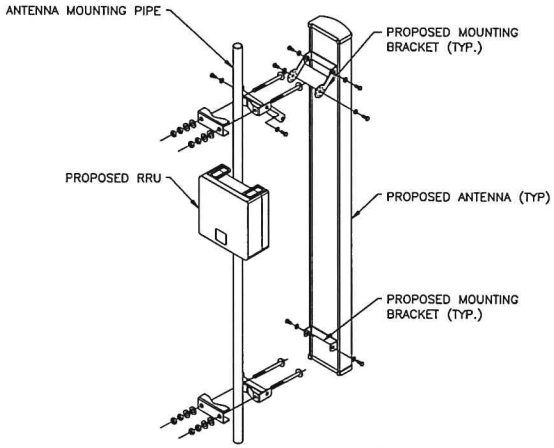

4 D-1 ANTENNA/RRU MOUNTING DETAIL
SCALE: N.T.S

T-Mobile stick together
12050 BALTIMORE AVENUE
BELTSVILLE, MD 20705

smartlink
1362 MELLON ROAD, SUITE 140,
HANOVER, MD 21076

Trylon
1825 W. WALNUT HILL LANE, SUITE 302
IRVING, TEXAS 75038
1-855-669-5421

STATE OF MARYLAND
JINSHAN WANG
Sep 08, 2020
54187
PROFESSIONAL ENGINEER

PROFESSIONAL CERTIFICATE
I HEREBY CERTIFY THAT THESE DOCUMENTS WERE PREPARED OR APPROVED BY ME, AND THAT I AM A DULY LICENSED PROFESSIONAL ENGINEER UNDER THE LAWS OF THE STATE OF MARYLAND, LICENSE NO 54187, EXPIRATION DATE 04/11/2021

DRAWING SCALES ARE INTENDED FOR 11"x17" OR 24"x36" SIZE PRINTED MEDIA ONLY.

SUBMITTALS

REV	DATE	DESCRIPTION	BY
A	08/21/20	90% CD	RC
0	09/07/20	100% CD	KZ

SITE INFORMATION

SITE NAME:
TOWN OF WESTMINSTER – WT
SITE NUMBER:
7BAN231A
SITE ADDRESS:
41ST STREET
WESTMINSTER, MD 21157

SHEET DESCRIPTION
DETAILS

SHEET No.
D-1

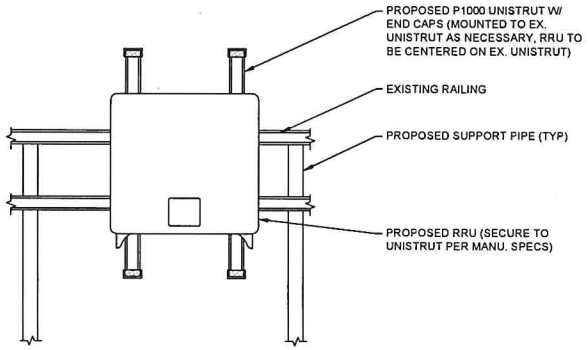

1 / D-2 RRU MOUNTING DETAIL
SCALE: N.T.S

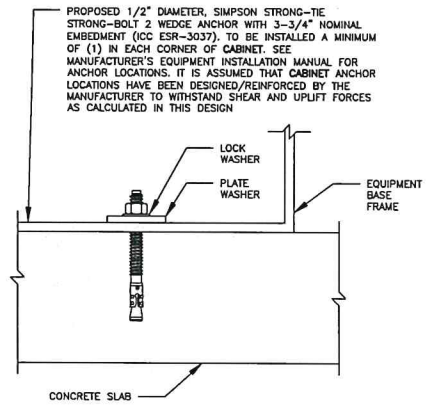

2 / D-2 CABINET ANCHORAGE DETAIL
SCALE: N.T.S

Ericsson Commercial In Confidence

HCS 6 X 12

ERICSSON HYBRID CABLE, 6 DC PAIRS + 12 OPTICAL PAIRS

UL APPROVED

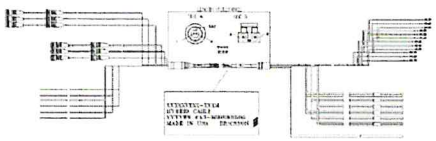

6 x 12 Weight and diameter		
	8 AWG DC wires	6 AWG DC wires
Weight (kg/m)	2.5 (+/- 0.1)	3.6 (+/- 0.1)
Weight (lb/ft)	1.7 (+/- 0.1)	2.4 (+/- 0.1)
Diameter (mm)	35 (+/- 2.0 mm)	42 (+/- 2.0 mm)
Diameter (in)	1.38 (+/- 0.1")	1.66 (+/- 0.1")
Close standard diameter equivalent	1 3/8"	1 5/8"

3 / D-2 6AWG DC CABLE
SCALE: N.T.S

PSU 4813 VOLTAGE BOOSTER

DIMENSIONS, WxDxH:	(19"x14.3"x1.7")
OPERATING TEMPERATURE:	-40 TO +60°C
INPUT VOLTAGE:	-38 TO -58.5 VOLTS
INPUT CURRENT, MAX:	200A
FUSE RATING:	30A, 40A OR 50A

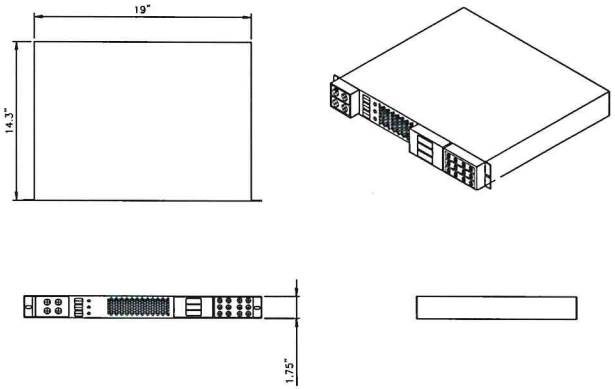

4 / D-2 PSU 4813 VOLTAGE BOOSTER
SCALE: N.T.S

T-Mobile
stick together
12050 BALTIMORE AVENUE
BELTSVILLE, MD 20705

smartlink
1362 MELLON ROAD, SUITE 140,
HANOVER, MD 21076

Trylon
1825 W. WALNUT HILL LANE, SUITE 302
IRVING, TEXAS 75038
1-855-799-5421

STATE OF MARYLAND
JINSHAN WANG
54187
PROFESSIONAL ENGINEER
Sep 08, 2020

PROFESSIONAL CERTIFICATE
I HEREBY CERTIFY THAT THESE DOCUMENTS WERE PREPARED OR APPROVED BY ME, AND THAT I AM A DULY LICENSED PROFESSIONAL ENGINEER UNDER THE LAWS OF THE STATE OF MARYLAND, LICENSE NO 54187, EXPIRATION DATE 04/11/2021

DRAWING SCALES ARE INTENDED FOR 11"x17" OR 24"x36" SIZE PRINTED MEDIA ONLY.

SUBMITTALS

REV	DATE	DESCRIPTION	BY
A	08/21/20	90% CD	RC
0	09/07/20	100% CD	KZ

SITE INFORMATION

SITE NAME:
TOWN OF WESTMINSTER – WT

SITE NUMBER:
7BAN231A

SITE ADDRESS:
41ST STREET
WESTMINSTER, MD 21157

SHEET DESCRIPTION
DETAILS

SHEET No.
D-2

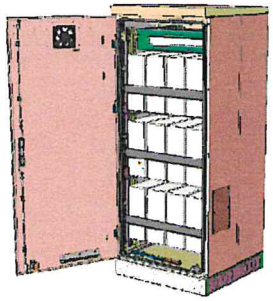

Enclosure B160

MECHANICAL SPECIFICATION	
WEIGHT	295 LBS (EMPTY) 1885 LBS (MAX)
DIMENSION	63x26x26 IN. (INCL. BASE FRAME)
BASE FRAME HEIGHT	6 IN.
MATERIAL	GALVANIZED STEEL (180G/M²)
COLOUR	POWDER PAINT NCS 2002-B
DOOR	FRONT ACCESS
LOCKING TYPE	PAD LOCK/CYLINDER

1 / D-3 B160 CABINET DETAIL
SCALE: N.T.S

Enclosure 6160 AC

MECHANICAL SPECIFICATION	
	320 LBS (EMPTY)
	1500 LBS (MAXIMUM LOADING)
DIMENSION (HxWxD)	1600x650x650 MM (INCL. BASE FRAME)
	63x26x26 IN. (INCL. BASE FRAME)
BASE FRAME HEIGHT	150 MM (6 IN.)
MOUNTING POSITION	GROUND
ENCLOSURE MATERIAL	ALUMINUM
	POWDER PAINT NCS 2002-B
	FRONT ACCESS
RACK TYPE	19" (IEC 60297-3-100)
LOCKING TYPE	PAD LOCK OR CYLINDER

2 / D-3 6160 CABINET DETAIL
SCALE: N.T.S

ERICSSON BASEBAND 6630

DIMENSION, WxDxH: 19"x13.8"x1.75"

TOTAL WEIGHT: < 14.3 lbs

CPRI SUPPORT: 2.5 Gbps, 4.9 Gbps, and 10.1 Gbps

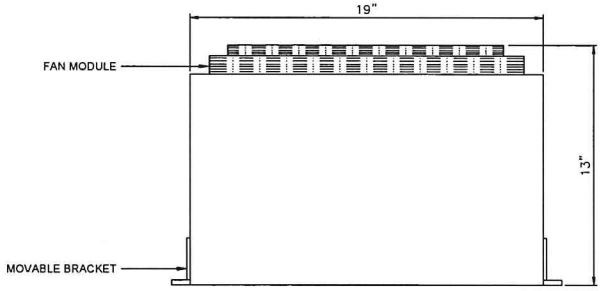

TOP VIEW

FRONT VIEW

3 / D-3 ERICSSON BASEBAND 6630
SCALE: N.T.S

ERICSSON BASEBAND UNIT 6648

DC POWER SUPPLY

NOMINAL VOLTAGE: -48VDC
TEMPERATURE: 0 TO + 55 DEG C
DIMENSION: 19" W X 13.86"D
WEIGHT: 16.53 lbs

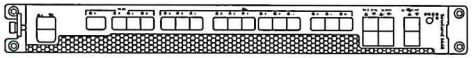

4 / D-3 ERICSSON BASEBAND 6648
SCALE: N.T.S

T-Mobile
stick together
12050 BALTIMORE AVENUE
BELTSVILLE, MD 20705

smartlink
1362 MELLON ROAD, SUITE 140,
HANOVER, MD 21076

Trylon
1625 W. WALNUT HILL LANE, SUITE 302
IRVING, TEXAS 75038
1-855-669-5421

STATE OF MARYLAND
JINSHAN WANG
Sep 04, 2020
54187
PROFESSIONAL ENGINEER

PROFESSIONAL CERTIFICATE
I HEREBY CERTIFY THAT THESE DOCUMENTS WERE PREPARED OR APPROVED BY ME, AND THAT I AM A DULY LICENSED PROFESSIONAL ENGINEER UNDER THE LAWS OF THE STATE OF MARYLAND, LICENSE NO 54187, EXPIRATION DATE 04/11/2021

DRAWING SCALES ARE INTENDED FOR 11"x17" OR 24"x36" SIZE PRINTED MEDIA ONLY.

SUBMITTALS

REV	DATE	DESCRIPTION	BY
A	08/21/20	90% CD	RC
0	09/07/20	100% CD	KZ

SITE INFORMATION

SITE NAME:
TOWN OF WESTMINSTER – WT

SITE NUMBER:
7BAN231A

SITE ADDRESS:
41ST STREET
WESTMINSTER, MD 21157

SHEET DESCRIPTION
DETAILS

SHEET No.
D-3

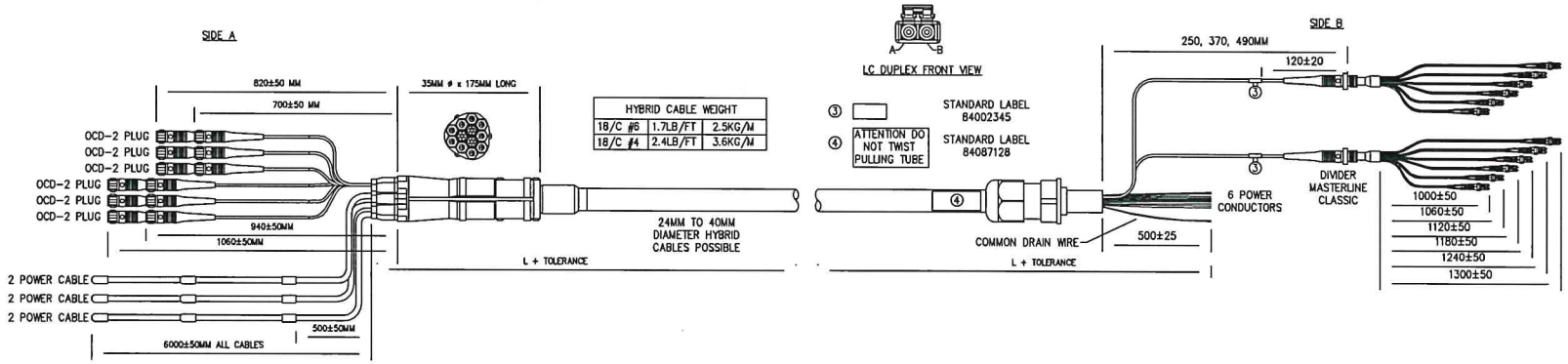

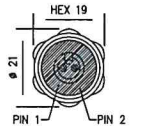

ODC-2 PLUG FRONT VIEW

TOLERANCE	ASSEMBLY LENGTH
+80	L < 5M
+2%	L 5M

POWER	
LENGTH	DIAMETER
L 60M	6MM² (10AWG)
L 60M	10MM² (8AWG)

FIBER OPTIC						
RRH NO.	SIDE A ODC PLUG	SIDE A PIN	SIDE B PIN	SIDE B COLOR LCD BOOTS	SIDE B LENGTH SIDE B	SIDE B RUBBER GROMMETS
1	ODC-2 RED	1	B	RED (SHORT BREAKOUT)	1000±50	1
		2	A			
2	ODC-2 GREEN	1	B	GREEN	1060±50	
		2	A			
3	ODC-2 BLUE	1	B	BLUE	1120±50	1
		2	A			
4	ODC-2 YELLOW	1	B	RED (SHORT BREAKOUT)	1180±50	
		2	A			
5	ODC-2 WHITE	1	B	GREEN	1240±50	1
		2	A			
6	ODC-2 BLACK	1	B	BLUE	1300±50	
		2	A			

POWER				
RRH NO.	REF HOOK UP	SIDE A WIRE COLOR	SIDE A CABLE DESIGNATOR	SIDE B WIRE COLOR
1	-48V	BLACK	RED	RED
	OV	GREY		BLACK
	GROUND	DRAIN		COMMON DRAIN
2	-48V	BLACK	GREEN	GREEN
	OV	GREY		WHITE
	GROUND	DRAIN		COMMON DRAIN
3	-48V	BLACK	BLUE	BLUE
	OV	GREY		ORANGE
	GROUND	DRAIN		COMMON DRAIN

POWER				
RRH NO.	REF HOOK UP	SIDE A WIRE COLOR	SIDE A CABLE DESIGNATOR	SIDE B WIRE COLOR
4	-48V	BLACK	RED x2 BANDS	RED
	OV	GREY		BLACK
	GROUND	DRAIN		COMMON DRAIN
5	-48V	BLACK	GREEN x2 BANDS	GREEN
	OV	GREY		WHITE
	GROUND	DRAIN		COMMON DRAIN
6	-48V	BLACK	BLUE x2 BANDS	BLUE
	OV	GREY		ORANGE
	GROUND	DRAIN		COMMON DRAIN

1 / D-4 MLE HYBRID CABLE (6 POWER / 12 FIBER)
SCALE: N.T.S

T-Mobile
stick together
12050 BALTIMORE AVENUE
BELTSVILLE, MD 20705

smartlink
1362 MELLON ROAD, SUITE 140,
HANOVER, MD 21076

Trylon
1825 W. WALNUT HILL LANE, SUITE 302
IRVING, TEXAS 75038
1-855-669-5421

STATE OF MARYLAND
JINSHAN WANG
Sep 08, 2020
54187
PROFESSIONAL ENGINEER

PROFESSIONAL CERTIFICATE
I HEREBY CERTIFY THAT THESE DOCUMENTS WERE PREPARED OR APPROVED BY ME, AND THAT I AM A DULY LICENSED PROFESSIONAL ENGINEER UNDER THE LAWS OF THE STATE OF MARYLAND, LICENSE NO 54187, EXPIRATION DATE 04/11/2021

DRAWING SCALES ARE INTENDED FOR 11"x17" OR 24"x36" SIZE PRINTED MEDIA ONLY.

SUBMITTALS			
REV	DATE	DESCRIPTION	BY
A	08/21/20	90% CD	RC
0	09/07/20	100% CD	KZ

SITE INFORMATION

SITE NAME:
TOWN OF WESTMINSTER – WT
SITE NUMBER:
7BAN231A
SITE ADDRESS:
41ST STREET
WESTMINSTER, MD 21157

SHEET DESCRIPTION
DETAILS

SHEET No.
D-4

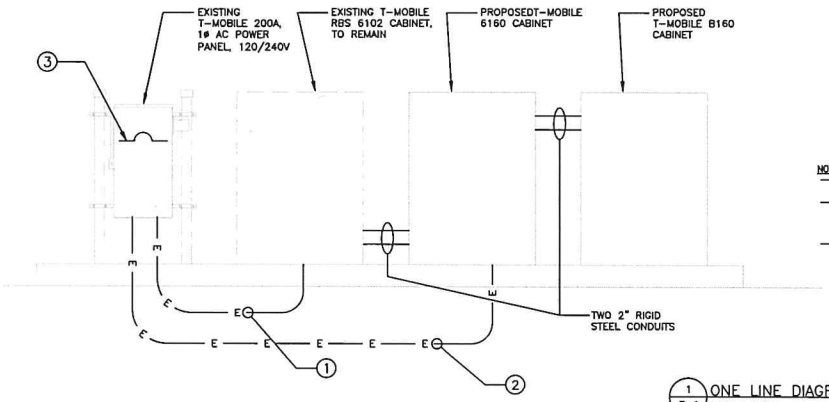

	CONDUIT AND BREAKER SCHEDULE	CONDUIT LENGTH	VDROP
1	EXISTING CONDUIT & CABLES		
2	PROPOSED (3) #3, (1) #8 GND, 1" CONDUIT	15'	0.20%
3	REUSE EXISTING 100A/2P BREAKER FOR NEW 6160 CABINET		

NOTES:
- ALL CONDUCTORS MUST BE COPPER WITH XHHW-2 INSULATION WITH SEPARATE GROUNDING ELECTRODE CONDUCTORS. CONDUITS IN THIS DESIGN ARE NOT CONSIDERED TO BE ELECTRICALLY CONTINUOUS.
- CONDUITS TO BE ROUTED ON DURABLOK SLEEPERS OR BENEATH PLATFORM, <36" ABOVE ROOF LEVEL. PROPOSED SCOPE OF WORK SEEKS EXCEPTION FOR 310.15(B)(3)(c) REQUIREMENTS FOR ROOFTOP CONDUIT RUNS THROUGH USE OF XHHW-2 INSULATED (THERMOSET) CONDUCTORS.
- CONDUCTOR SIZES BASED ON ESTIMATED LENGTH WITH 20% OVERAGE AND ROUNDED TO NEAREST 5' FOR FIELD FIT. SHOULD LENGTHS EXCEED QUOTED NUMBER, CC TO CONTACT ENGINEER TO VERIFY SUITABILITY OF CONDUCTORS BASED ON ACTUAL LENGTH OF CONDUIT.

1 / E-1 ONE LINE DIAGRAM
SCALE: N.T.S

PANEL SCHEDULE

Information:
MFG/MODEL
BRK SIZE
VOLT PHASE/WIRES
BUS AMPS

Panel: EXISTING
Fed From: UPSTREAM DEVICE OR PA
AIC Rating
RATED KVA 43
Panel Type NEMA 1 / 200% NEUTRAL

WIRE FEED				
Description	Amps	TYPE	Gauge	Note
Phase	200	CU		
Neutral	200	CU		
EGC		CU		
L3				

MAIN BREAKER RATING (A): 200 — SYSTEM VOLTAGE (V): 240

CKT TYPE	Type	DESCRIPTION	VA	AMPS	BKR	POS'N	L1	L2	L3	N	POS'N	BKR	VA	AMPS	DESCRIPTION	Type	CKT TYPE
SPARE	2P	SPARE (OFF)			100	1	1				2	60	1	0.0	SURGE PROTECTION	2P	DEVICE
SPARE						3		1			4		1	0.0			DEVICE
LTING	1P	LIGHT	300	2.5	20	5	10000				6	150	10000	83.3	6102	4P	EQUIPMENT
RECEPTACLE	1P	GFCI	180	1.5	10	7		10100			8		10000	83.3			EQUIPMENT
EQUIPMENT	2P	3100 UNITS	2700	22.5	30	9	2700				10						EQUIPMENT
EQUIPMENT			2700	22.5		11		2700			12						EQUIPMENT
						PHASE TOTALS (VA):	13001	12881									
						CURRENT PER PHASE (A):	108	107									

TOTAL CONNECTED LOAD (KVA):	25.88
TOTAL CONNECTED (AMPS):	107.64
TOTAL CALCULATED LOAD (KVA):	15.72
TOTAL CALCULATED (AMPS):	65.50
SPARE CAPACITY (kVA):	32.3

Load Calculation

Category	CONNECTED LOAD KVA	CONT/NON-CONT FACTOR	DEMAND FACTOR	CALCULATED LOAD KVA
Lighting	0.30	1.00	1.0	0.30
Receptacles	0.18	1.00	1.0	0.18
Receptacles	0.00	1.00	0.5	0.00
Kitchen	0.00	1.00	1.0	0.00
HVAC	0.00	1.00	0.7	0.00
SPACE HEATER	0.00	1.00	1.0	0.00
Largest Motor	0.00	1.25	1.0	0.00
Other Motor(s)	0.00	1.00	0.5	0.00
RECTIFIERS	0.00	1.00	1.0	0.00
EQUIPMENT	25.40	1.00	0.6	15.24
Custom 3	0.00	1.00	1.0	0.00
Custom 4	0.00	1.00	0.5	0.00
SPARE	0.0	1.00	1.0	0.0
TOTALS	25.9		0.6	15.7

2 / A-2 EXISTING PANEL SCHEDULE
SCALE: N.T.S

PANEL SCHEDULE

Information:
MFG/MODEL
BRK SIZE
VOLT PHASE/WIRES
BUS AMPS

Panel: PROPOSED
Fed From: UPSTREAM DEVICE OR PA
AIC Rating
RATED KVA 43
Panel Type NEMA 1 / 200% NEUTRAL

WIRE FEED				
Description	Amps	TYPE	Gauge	Note
Phase	200	CU		
Neutral	200	CU		
EGC		CU		
L3				

MAIN BREAKER RATING (A): 200 — SYSTEM VOLTAGE (V): 240

CKT TYPE	Type	DESCRIPTION	VA	AMPS	BKR	POS'N	L1	L2	L3	N	POS'N	BKR	VA	AMPS	DESCRIPTION	Type	CKT TYPE
E-QUIPMENT	2P	6160 CABINET	9200	42.3	100	1	9201				2	60	1	0.0	SURGE PROTECTION	2P	DEVICE
EQUIPMENT			9200	42.3		3		9201			4		1	0.0			DEVICE
LTING	1P	LIGHT	300	2.5	20	5	10300				6	150	10000	83.3	6102	4P	EQUIPMENT
RECEPTACLE	1P	GFCI	180	1.5	10	7		10180			8		10000	83.3			EQUIPMENT
SPARE	2P	SPARE (OFF)			30	9	0				10						EQUIPMENT
SPARE						11		0			12						EQUIPMENT
						PHASE TOTALS (VA):	19501	19381									
						CURRENT PER PHASE (A):	154	153									

TOTAL CONNECTED LOAD (KVA):	38.88
TOTAL CONNECTED (AMPS):	153.68
TOTAL CALCULATED LOAD (KVA):	22.32
TOTAL CALCULATED (AMPS):	93.00
SPARE CAPACITY (kVA):	25.7

Load Calculation

Category	CONNECTED LOAD KVA	CONT/NON-CONT FACTOR	DEMAND FACTOR	CALCULATED LOAD KVA
Lighting	0.30	1.00	1.0	0.30
Receptacles	0.18	1.00	1.0	0.18
Receptacles	0.00	1.00	0.5	0.00
Kitchen	0.00	1.00	1.0	0.00
HVAC	0.00	1.00	0.7	0.00
SPACE HEATER	0.00	1.00	1.0	0.00
Largest Motor	0.00	1.25	1.0	0.00
Other Motor(s)	0.00	1.00	0.5	0.00
RECTIFIERS	0.00	1.00	1.0	0.00
EQUIPMENT	38.40	1.00	0.6	23.04
Custom 3	0.00	1.00	1.0	0.00
Custom 4	0.00	1.00	0.5	0.00
SPARE	0.0	1.00	1.0	0.0
TOTALS	38.9		0.6	23.3

3 / A-2 PROPOSED PANEL SCHEDULE
SCALE: N.T.S

T-Mobile
stick together
12050 BALTIMORE AVENUE
BELTSVILLE, MD 20705

smartlink
1362 MELLON ROAD, SUITE 140,
HANOVER, MD 21076

Trylon
1825 W. WALNUT HILL LANE, SUITE 302
IRVING, TEXAS 75038
1-855-669-5421

STATE OF MARYLAND — JINSHAN WANG — 54187 — PROFESSIONAL ENGINEER
Exp 08/2021

PROFESSIONAL CERTIFICATE
I HEREBY CERTIFY THAT THESE DOCUMENTS WERE PREPARED OR APPROVED BY ME, AND THAT I AM A DULY LICENSED PROFESSIONAL ENGINEER UNDER THE LAWS OF THE STATE OF MARYLAND, LICENSE NO 54187, EXPIRATION DATE 04/11/2021

DRAWING SCALES ARE INTENDED FOR 11"x17" OR 24"x36" SIZE PRINTED MEDIA ONLY.

SUBMITTALS

REV	DATE	DESCRIPTION	BY
A	08/21/20	90% CD	RC
0	09/07/20	100% CD	KZ

SITE INFORMATION

SITE NAME:
TOWN OF WESTMINSTER – WT
SITE NUMBER:
7BAN231A
SITE ADDRESS:
41ST STREET
WESTMINSTER, MD 21157

SHEET DESCRIPTION
ELECTRICAL DETAILS

SHEET No.
E-1

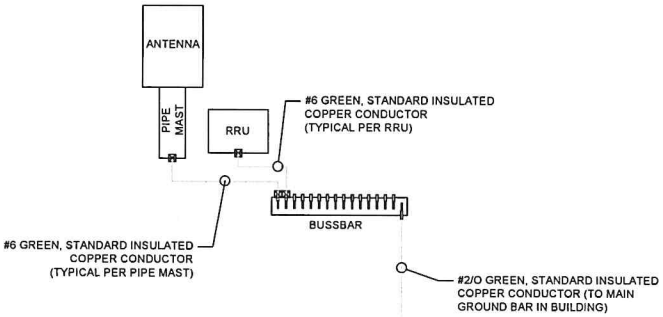

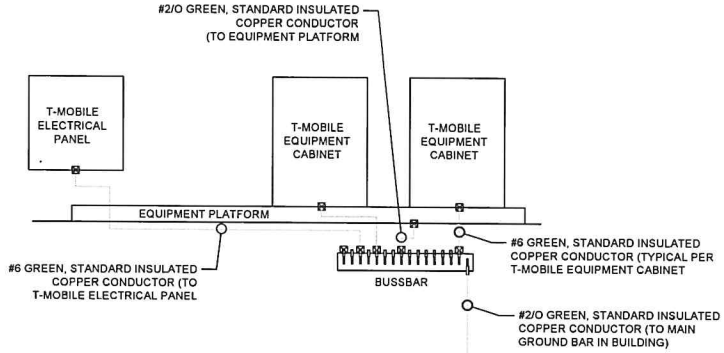

1 / E-2 TYPICAL GROUNDING DIAGRAM
SCALE: N.T.S

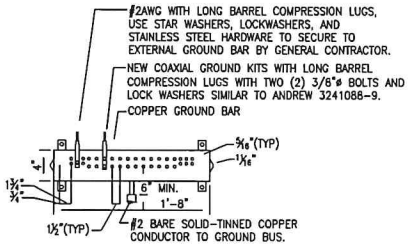

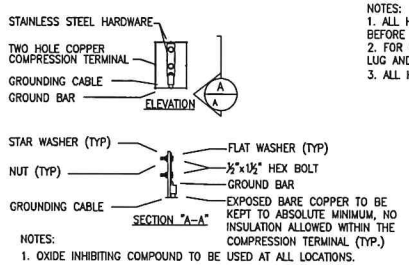

NOTES:
1. OXIDE INHIBITING COMPOUND TO BE USED AT ALL LOCATIONS.

NOTES:
1. ALL HARDWARE STAINLESS STEEL COAT ALL SURFACES WITH KOPR-SHIELD BEFORE MATING.
2. FOR GROUND BOND TO STEEL ONLY: INSERT A TOOTH WASHER BETWEEN LUG AND STEEL, COAT ALL SURFACES WITH KOPR-SHIELD.
3. ALL HOLES ARE COUNTERSUNK 1/8".

2 / E-2 GROUND BAR CONNECTION DETAIL
SCALE: N.T.S

T-Mobile
stick together
12050 BALTIMORE AVENUE
BELTSVILLE, MD 20705

smartlink
1362 MELLON ROAD, SUITE 140,
HANOVER, MD 21076

Trylon
1825 W. WALNUT HILL LANE, SUITE 302
IRVING, TEXAS 75038
1-855-669-5421

STATE OF MARYLAND
JINSHAN WANG
Sep 08, 2020
54187
PROFESSIONAL ENGINEER

PROFESSIONAL CERTIFICATE
I HEREBY CERTIFY THAT THESE DOCUMENTS WERE PREPARED OR APPROVED BY ME, AND THAT I AM A DULY LICENSED PROFESSIONAL ENGINEER UNDER THE LAWS OF THE STATE OF MARYLAND, LICENSE NO 54187, EXPIRATION DATE 04/11/2021

DRAWING SCALES ARE INTENDED FOR 11"x17" OR 24"x36" SIZE PRINTED MEDIA ONLY.

SUBMITTALS

REV	DATE	DESCRIPTION	BY
A	08/21/20	90% CD	RC
0	09/07/20	100% CD	KZ

SITE INFORMATION

SITE NAME:
TOWN OF WESTMINSTER – WT
SITE NUMBER:
7BAN231A
SITE ADDRESS:
41ST STREET
WESTMINSTER, MD 21157

SHEET DESCRIPTION
GROUNDING DETAILS

SHEET No.
E-2

Final Config: 67D5A997DB

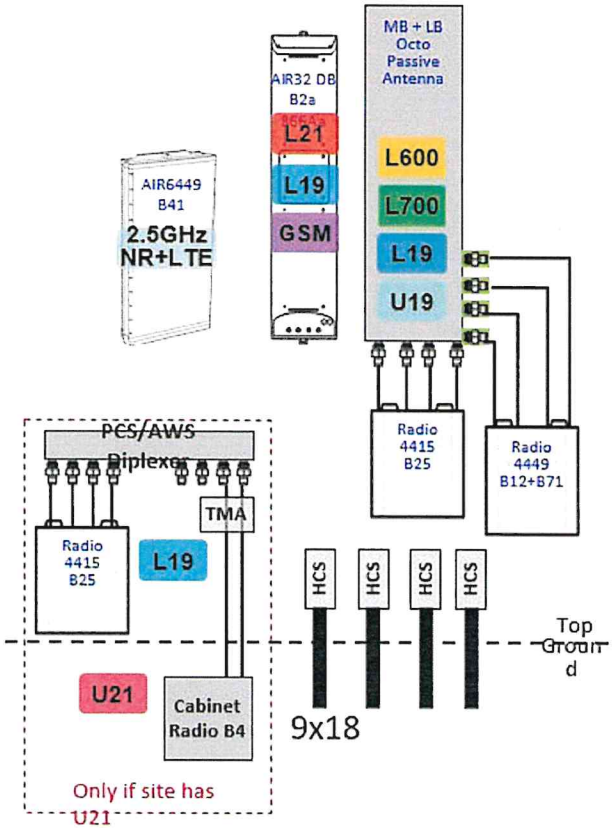

1 E-3 RF PLUMBING DIAGRAM
SCALE: N.T.S

T-Mobile
stick together
12050 BALTIMORE AVENUE
BELTSVILLE, MD 20705

smartlink
1362 MELLON ROAD, SUITE 140,
HANOVER, MD 21076

Trylon
1825 W. WALNUT HILL LANE, SUITE 302
IRVING, TEXAS 75038
1-888-669-5421

STATE OF MARYLAND
JINGHAN WANG
54187
PROFESSIONAL ENGINEER
Sep 08, 2020

PROFESSIONAL CERTIFICATE
I HEREBY CERTIFY THAT THESE DOCUMENTS WERE PREPARED OR APPROVED BY ME, AND THAT I AM A DULY LICENSED PROFESSIONAL ENGINEER UNDER THE LAWS OF THE STATE OF MARYLAND, LICENSE NO 54187, EXPIRATION DATE 04/11/2021

DRAWING SCALES ARE INTENDED FOR 11"x17" OR 24"x36" SIZE PRINTED MEDIA ONLY.

SUBMITTALS

REV	DATE	DESCRIPTION	BY
A	08/21/20	90% CD	RC
0	09/07/20	100% CD	KZ

SITE INFORMATION

SITE NAME:
TOWN OF WESTMINSTER – WT
SITE NUMBER:
7BAN231A
SITE ADDRESS:
41ST STREET
WESTMINSTER, MD 21157

SHEET DESCRIPTION
RF PLUMBING DIAGRAM

SHEET No.
E-3